DE'LONGHI "INT" XTS 130

YELLOW-GIALLO

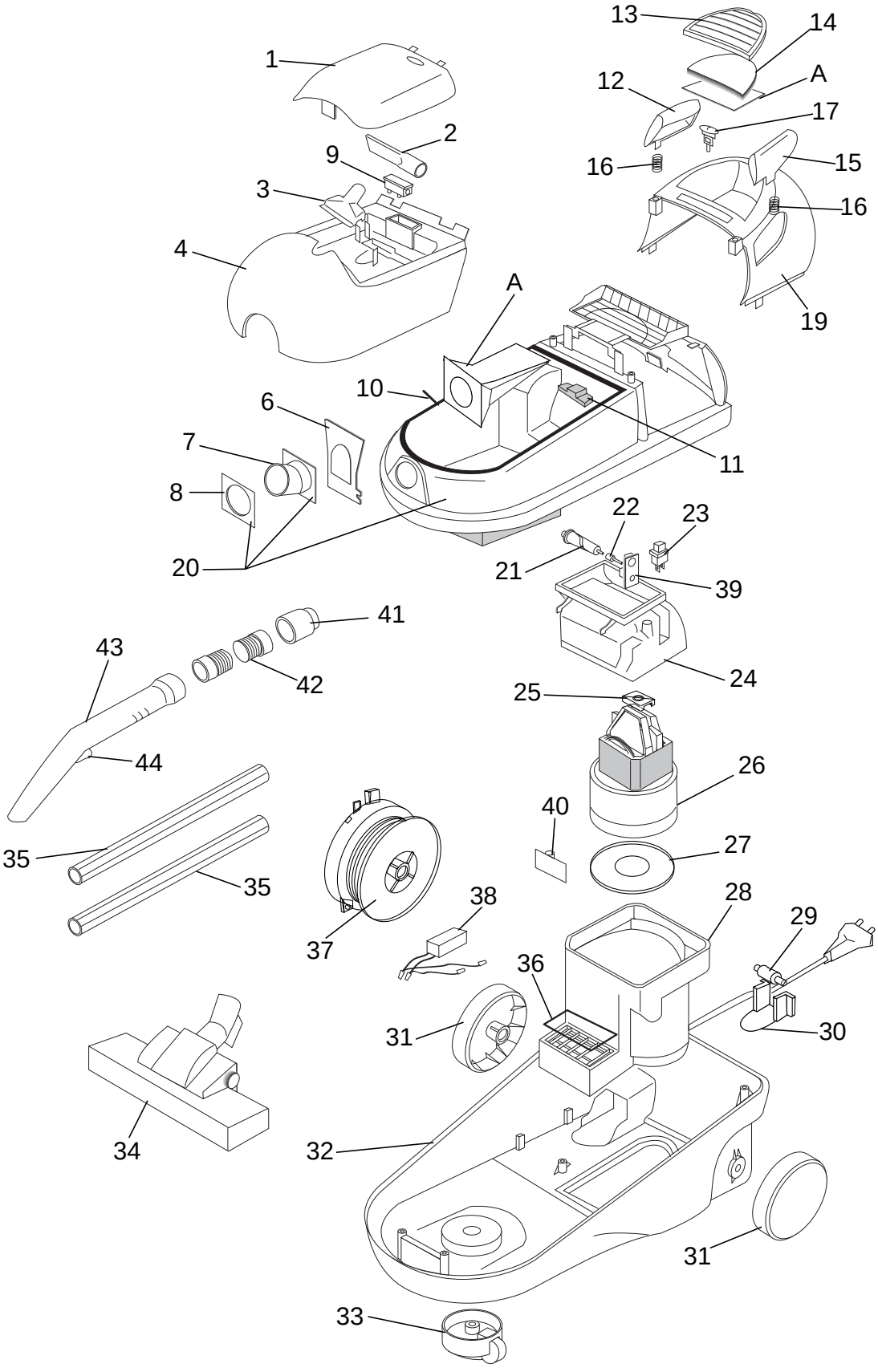

DLS SERVICE

DE’LONGHI ’INT’ XTS 130 Giallo Cod.0-03267

Pos	Codice	Italiano	English	Francais	Deutsch	Espanol
01	**EM1428**	COPERCHIO	COVER	COUVERCLE	DECKEL	TAPA
02	**EM1097**	BOCCHETTA	VENT	SUCEUR	DUESE	BOQUILLA
03	**EM1098**	BOCCHETTA	VENT	SUCEUR	DUESE	BOQUILLA
04	**EM1186**	COPERCHIO	COVER	COUVERCLE	DECKEL	TAPA
06	**EM1196**	SUPPORTO	SUPPORT	SUPPORT	HALTER	SOPORTE
07	**EM1193**	RACCORDO	CONNECTION	RACCORD	ANSCHLUSS	JUNTURA
08	**EM1220**	GUARNIZIONE	GASKET	JOINT	DICHTUNG	GUARNICION
09	**EM1114**	ALLARME	ALARM	ALARME	ALARM	ALARMA
10	**EM1222**	GUARNIZIONE	GASKET	JOINT	DICHTUNG	GUARNICION
11	**EM1218**	FILTRO	FILTER	FILTRE	FILTER	FILTRO
12	**EM1192**	PULSANTE	PUSH BUTTON	POUSSOIR	DRUCKKNOPF	BOTON
13	**EM1190**	GRIGLIA	GRID	GRILLE	GITTER	PARRILLA
14	**EM1221**	FILTRO	FILTER	FILTRE	FILTER	FILTRO
15	**EM1191**	PULSANTE	PUSH BUTTON	POUSSOIR	DRUCKKNOPF	BOTON
16	**EM1233**	MOLLA	SPRING	RESSORT	FEDER	MUELLE
19	**EM1185**	CALOTTA	COVER	CALOTTE	HAUBE	TAPA
20	**EM1183**	CORPO	SHELL	CORPS	KOERPER	CUERPO
23	**EM1134**	INTERRUTTORE	SWITCH	INTERRUPTEUR	SCHALTER	INTERRUPTOR
24	**EM1201**	GUSCIO SUP.	PROTECTION Upper	ENVELOPPE SUP.	GEHAEUSE OBEN	VAINA SUP.
25	**EM1228**	GOMMINO	RUBBER PAD	PARE CHOCS	PUFFER	GUARNICION
26	**EM1234**	MOTORE	MOTOR	MOTEUR	MOTOR	MOTOR
27	**EM1229**	GUARNIZIONE	GASKET	JOINT	DICHTUNG	GUARNICION
28	**EM1200**	GUSCIO INF.	PROTECTION LOWER	ENVELOPPE INF.	GEHAEUSE UNTEN	VAINA INF.
29	**EM1035**	RULLO	ROLLER	GALET	WALZE	RODILLO
30	**EM1136**	SUPPORTO	SUPPORT	SUPPORT	HALTER	SOPORTE
31	**EM1195**	RUOTA	CASTOR	ROULETTE	RAD	RUEDA
32	**EM1182**	BASAMENTO	BASE	SOCLE	UNTERGESTELL	BASE
33	**EM1145**	RUOTA ANT.	FRONT CASTOR	ROULETTE ANT.	VORDERLAUFROLLE	RUEDA ANT.
34	**EM1384**	SPAZZOLA	BRUSH	BROSSE	BUERSTE	CEPILLO
35	**EM1079**	TUBO	TUBE	TUBE	ROHR	TUBO
36	**EM1230**	O-RING	O-RING	JOINT OR	O-RING	O-RING
37	**EM1381**	AVVOLGICAVO	CABLE WINDER	ENROULEUR	KABELAUFWICKLUNG	De Cable Recogecables
38	**EM1243**	CONDENSATORE ELETTRICO	CAPACITOR	CONDENSATEUR	KONDENSATOR	CONDENSADOR ELEC.
40	**EM1273**	SUPPORTO	SUPPORT	SUPPORT	HALTER	SOPORTE
41	**EM1194**	SNODO	JOINT	ARTICULATION	GELENK	ARTICULACION
42	**EM1122**	FLESSIBILE	FLEXIBLE HOSE	TUYAU FLEXIBLE	SCHLAUCH	FLEXIBLE
43	**EM1162**	IMPUGNATURA	HANDLE	POIGNEE	GRIFF	EMPUÑADURA
44	**EM1253**	CURSORE	SLIDER	CURSEUR	SCHIEBER	CURSOR
A	**VT508142**	KIT SACCHI	BAGS KIT	KIT SACS	BEUTEL SATZ	JUEGO DE SACOS