DE'LONGHI "INT" XTCN 130

traino SUN

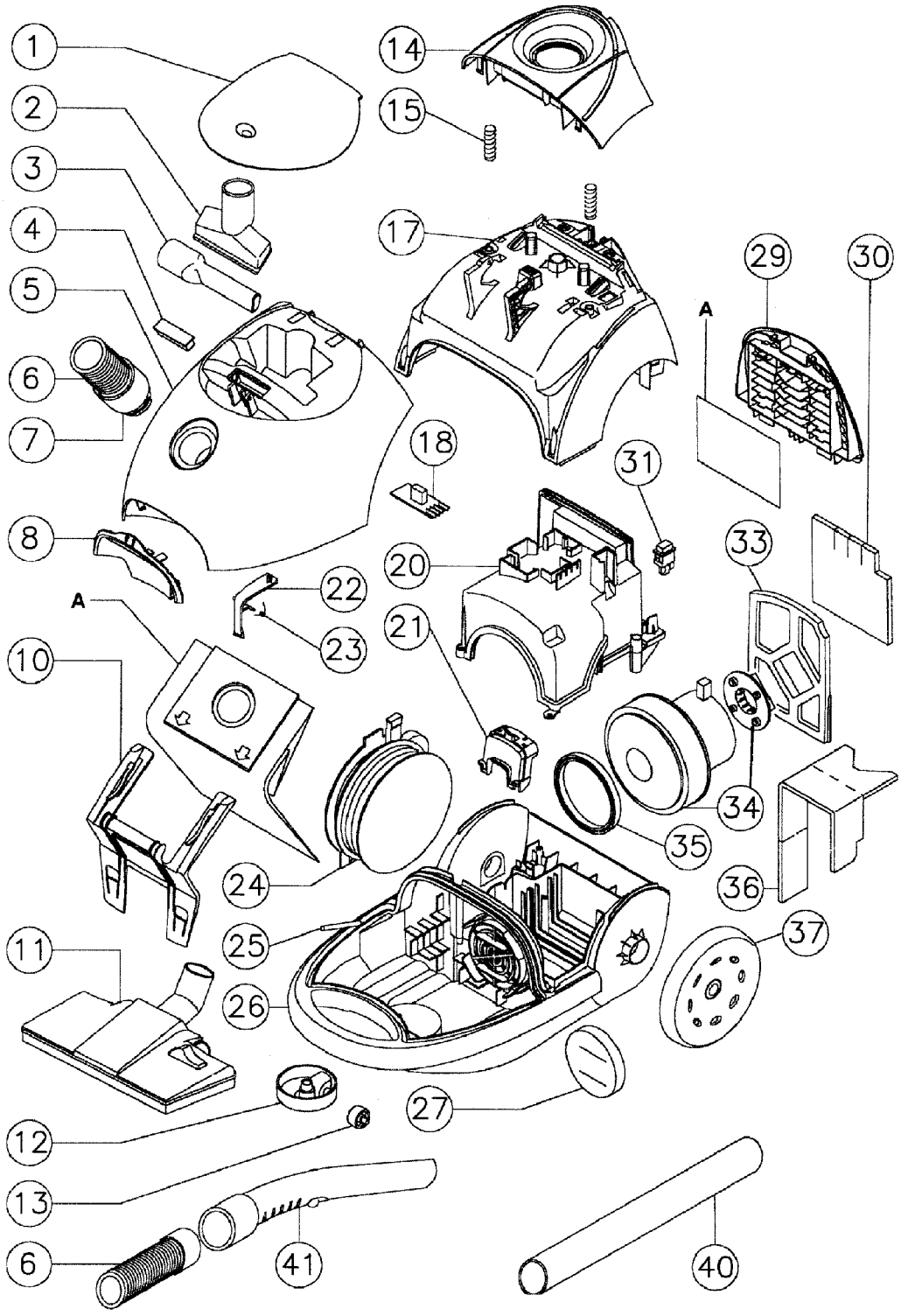

DLS SERVICE

DE’LONGHI ’INT’ XTCN130 SUN 0-03200

Pos	Codice	Italiano	English	Francais	Deutsch	Espanol
01	**EM1366**	COPERCHIETTO	COVER	COUVERCLE	DECKEL	TAPADERA
02	**EM1098**	BOCCHETTA	VENT	SUCEUR	DUESE	BOQUILLA
03	**EM1097**	BOCCHETTA	VENT	SUCEUR	DUESE	BOQUILLA
04	**EM1114**	ALLARME	ALARM	ALARME	ALARM	ALARMA
05	**EM1363**	FRONTALE	FRONT PANEL	PANNEAU AVANT	VORDERWAND	PARTE DELANTERA
06	**EM1122**	FLESSIBILE	FLEXIBLE HOSE	TUYAU FLEXIBLE	SCHLAUCH	FLEXIBLE
07	**EM1194**	SNODO	JOINT	ARTICULATION	GELENK	ARTICULACION
08	**EM1362**	LEVA	LEVER	LEVIER	HEBEL	PALANCA
10	**EM1353**	SUPPORTO	SUPPORT	SUPPORT	HALTER	SOPORTE
11	**EM1384**	SPAZZOLA	BRUSH	BROSSE	BUERSTE	CEPILLO
12	**EM1356**	SUPPORTO	SUPPORT	SUPPORT	HALTER	SOPORTE
13	**EM1355**	RUOTA ANT.	FRONT CASTOR	ROULETTE ANT.	VORDERLAUFROLLE	RUEDA ANT.
14	**EM1371**	MASCHERINA	TEMPLATE	PLAQUE	BLENDE	PLANTILLA
15	**EM1231**	MOLLA	SPRING	RESSORT	FEDER	MUELLE
17	**EM1351**	CORPO	SHELL	CORPS	KOERPER	CUERPO
18	**EM1138**	CONDENSATORE ELETTRICO	CAPACITOR	CONDENSATEUR	KONDENSATOR	CONDENSADOR ELEC.
20	**EM1352**	SCATOLA	BOX	BOITE	ABDECKUNG	CAJA
21	**EM1360**	CHIUSURA	CLOSURE	FERMETURE	VERSCHLUSS	CIERRE
22	**EM1373**	LEVA	LEVER	LEVIER	HEBEL	PALANCA
23	**EM1376**	MOLLA	SPRING	RESSORT	FEDER	MUELLE
24	**EM1381**	AVVOLGICAVO	CABLE WINDER	ENROULEUR	KABELAUFWICKLUNG	De Cable Recogecables
25	**EM1017**	GUARNIZIONE	GASKET	JOINT	DICHTUNG	GUARNICION
26	**EM1350**	BASAMENTO	BASE	SOCLE	UNTERGESTELL	BASE
27	**EM1020**	FILTRO	FILTER	FILTRE	FILTER	FILTRO
29	**EM1361**	GRIGLIA POSTERIORE	REAR GRID	GRILLE POST.	GITTER HINTEN	PARRILLA POST.
30	**EM1374**	FILTRO	FILTER	FILTRE	FILTER	FILTRO
31	**EM1134**	INTERRUTTORE	SWITCH	INTERRUPTEUR	SCHALTER	INTERRUPTOR
33	**EM1354**	SUPPORTO	SUPPORT	SUPPORT	HALTER	SOPORTE
34	**EM1378**	MOTORE	MOTOR	MOTEUR	MOTOR	MOTOR
35	**EM1132**	GUARNIZIONE	GASKET	JOINT	DICHTUNG	GUARNICION
36	**EM1375**	ISOLANTE	INSULATOR	ISOLANT	ISOLIERSTOFF	AISLANTE
37	**EM1357**	RUOTA POST.	REAR CASTOR	ROULETTE POST.	RUECKLAUFROLLE	RUEDA POS.
40	**EM1080**	TUBO	TUBE	TUBE	ROHR	TUBO
41	**EM1162**	IMPUGNATURA	HANDLE	POIGNEE	GRIFF	EMPUÑADURA
A	**VT508000**	KIT FILTRI	FILTERS KIT	KIT FILTRES	FILTER SATZ	JUEGO DE FILTROS