DE'LONGHI "EU2" XTC 13E

EXECUTION: 2

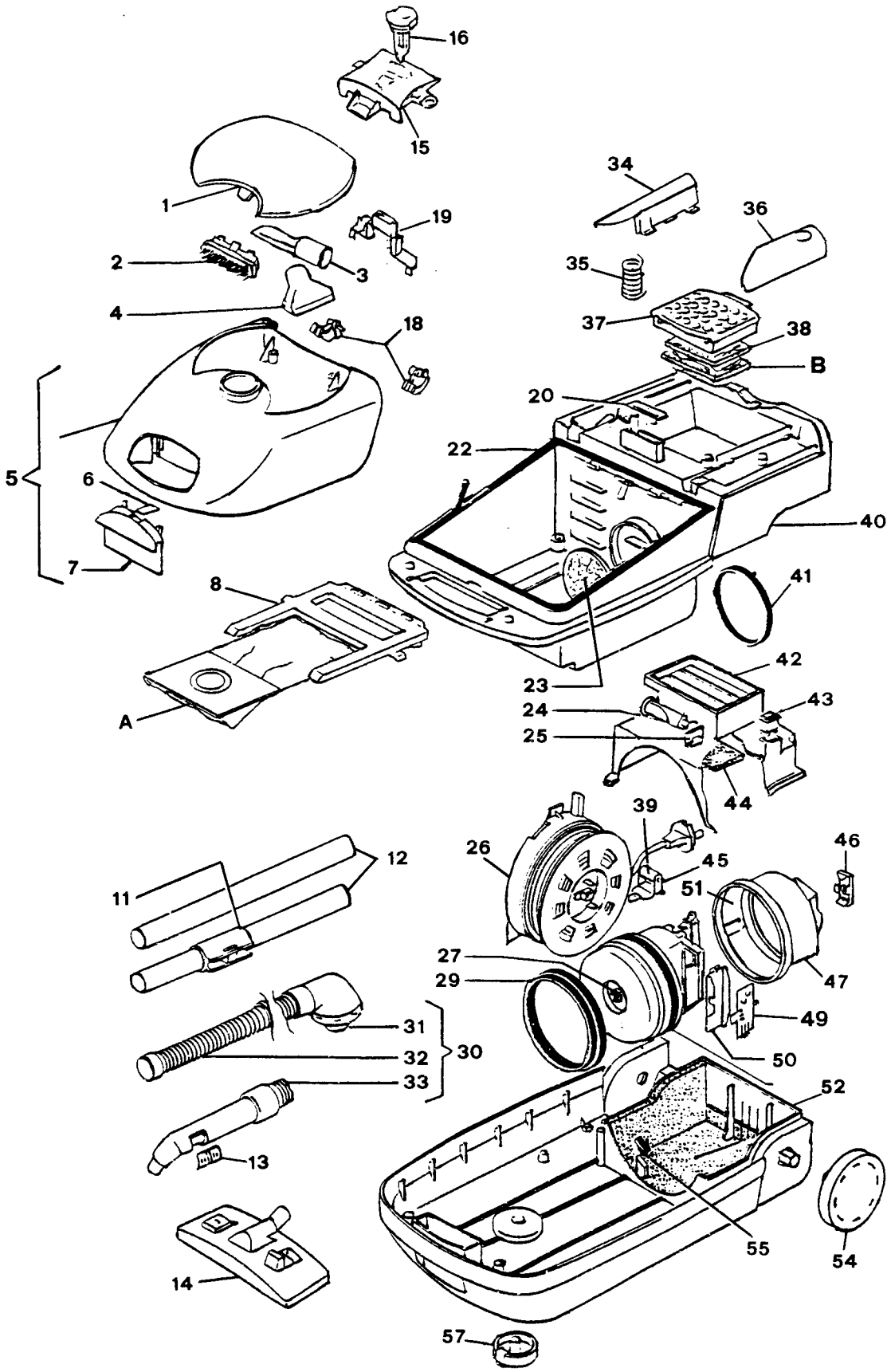

DLS SERVICE

DE'LONGHI 'EU' XTC 13E Ex: 2 0-03261

Pos	Codice	Italiano	English	Francais	Deutsch	Espanol
01	**EM1324**	COPERCHIO	COVER	COUVERCLE	DECKEL	TAPA
02	**EM1096**	SPAZZOLINO	BRUSH	BROSSE	BUERSTCHEN	CEPILLO
03	**EM1097**	BOCCHETTA	VENT	SUCEUR	DUESE	BOQUILLA
04	**EM1098**	BOCCHETTA	VENT	SUCEUR	DUESE	BOQUILLA
05	**EM1100**	GUSCIO SUP.	PROTECTION Upper	ENVELOPPE SUP.	GEHAEUSE OBEN	VAINA SUP.
06	**EM1102**	MOLLA	SPRING	RESSORT	FEDER	MUELLE
07	**EM1104**	LEVA	LEVER	LEVIER	HEBEL	PALANCA
08	**EM1011**	SUPPORTO	SUPPORT	SUPPORT	HALTER	SOPORTE
11	**EM1106**	INNESTO	COUPLING	EMBRAYAGE	KUPPLUNG	ACOPLAMIENTO
12	**EM1080**	TUBO	TUBE	TUBE	ROHR	TUBO
13	**EM1149**	CURSORE	SLIDER	CURSEUR	SCHIEBER	CURSOR
14	**EM1339**	SPAZZOLA	BRUSH	BROSSE	BUERSTE	CEPILLO
15	**EM1320**	COPERCHIETTO	COVER	COUVERCLE	DECKEL	TAPADERA
16	**EM1110**	CURSORE	SLIDER	CURSEUR	SCHIEBER	CURSOR
18	**EM1112**	CERNIERA	HINGE	CHARNIERE	SCHARNIER	BISAGRA
19	**EM1113**	DISTANZIALE	SPACER	ENTRETOISE	DISTANZSTUECK	DISTANCIADOR
20	**EM1114**	ALLARME	ALARM	ALARME	ALARM	ALARMA
22	**EM1017**	GUARNIZIONE	GASKET	JOINT	DICHTUNG	GUARNICION
23	**EM1020**	FILTRO	FILTER	FILTRE	FILTER	FILTRO
24	**EM1115**	TUBETTO	TUBE	TUBE	ROHR	TUBITO
25	**EM1116**	POTENZIOMETRO	POTENTIOMETER	POTENTIOMETRE	POTENTIOMETER	POTENCIOMETRO
26	**EM1118**	AVVOLGICAVO	CABLE WINDER	ENROULEUR	KABELAUFWICKLUNG	De Cable Recogecables
27	**EM1235**	MOTORE	MOTOR	MOTEUR	MOTOR	MOTOR
29	**EM1120**	GUARNIZIONE	GASKET	JOINT	DICHTUNG	GUARNICION
30	**EM1121**	TUBO FLESSIBILE	FLEXIBLE TUBE	TUBE FLESSIBLE	SCHLAUCH	TUBO FLEXIBLE
31	**EM1075**	RACCORDO	CONNECTION	RACCORD	ANSCHLUSS	JUNTURA
32	**EM1122**	FLESSIBILE	FLEXIBLE HOSE	TUYAU FLEXIBLE	SCHLAUCH	FLEXIBLE
33	**EM1089**	MANICOTTO	COUPLING	MANCHON	MANSCHETTE	MANGUITO
34	**EM1123**	PULSANTE	PUSH BUTTON	POUSSOIR	DRUCKKNOPF	BOTON
35	**EM1006**	MOLLA	SPRING	RESSORT	FEDER	MUELLE
36	**EM1124**	PULSANTE	PUSH BUTTON	POUSSOIR	DRUCKKNOPF	BOTON
37	**EM1126**	GRIGLIA	GRID	GRILLE	GITTER	PARRILLA
38	**EM1128**	FILTRO	FILTER	FILTRE	FILTER	FILTRO
39	**EM1035**	RULLO	ROLLER	GALET	WALZE	RODILLO
40	**EM1130**	CORPO	SHELL	CORPS	KOERPER	CUERPO
41	**EM1132**	GUARNIZIONE	GASKET	JOINT	DICHTUNG	GUARNICION
42	**EM1133**	SCATOLA	BOX	BOITE	ABDECKUNG	CAJA
43	**EM1134**	INTERRUTTORE	SWITCH	INTERRUPTEUR	SCHALTER	INTERRUPTOR
44	**EM1135**	FILTRO	FILTER	FILTRE	FILTER	FILTRO
45	**EM1136**	SUPPORTO	SUPPORT	SUPPORT	HALTER	SOPORTE
46	**EM1227**	GOMMINO	RUBBER PAD	PARE CHOCS	PUFFER	GUARNICION
47	**EM1165**	CALOTTA	COVER	CALOTTE	HAUBE	TAPA
49	**EM1238**	SCHEDA	BOARD	FICHE	PLATINE	FICHA
50	**EM1140**	SUPPORTO	SUPPORT	SUPPORT	HALTER	SOPORTE
51	**EM1226**	ISOLANTE	INSULATOR	ISOLANT	ISOLIERSTOFF	AISLANTE
52	**EM1142**	FONDO	BOTTOM	FOND	BODEN	FONDO
54	**EM1143**	RUOTA	CASTOR	ROULETTE	RAD	RUEDA
55	**EM1144**	GOMMINO	RUBBER PAD	PARE CHOCS	PUFFER	GUARNICION
57	**EM1145**	RUOTA ANT.	FRONT CASTOR	ROULETTE ANT.	VORDERLAUFROLLE	RUEDA ANT.
A	**EM1340**	SACCO	BAG	SAC	BEUTEL	SACO
B	**VT508130**	KIT FILTRI	FILTERS KIT	KIT FILTRES	FILTER SATZ	JUEGO DE FILTROS