DE'LONGHI "INT" XS 1200D

(VERSIONE CON TUBI CROMATI)

DIFFERISCE DAL MODELLO PRECEDENTE, ESPLOSO N° 232 DEL 07/93, PER TUBO (POS.4) E SPAZZOLA (POS.7).

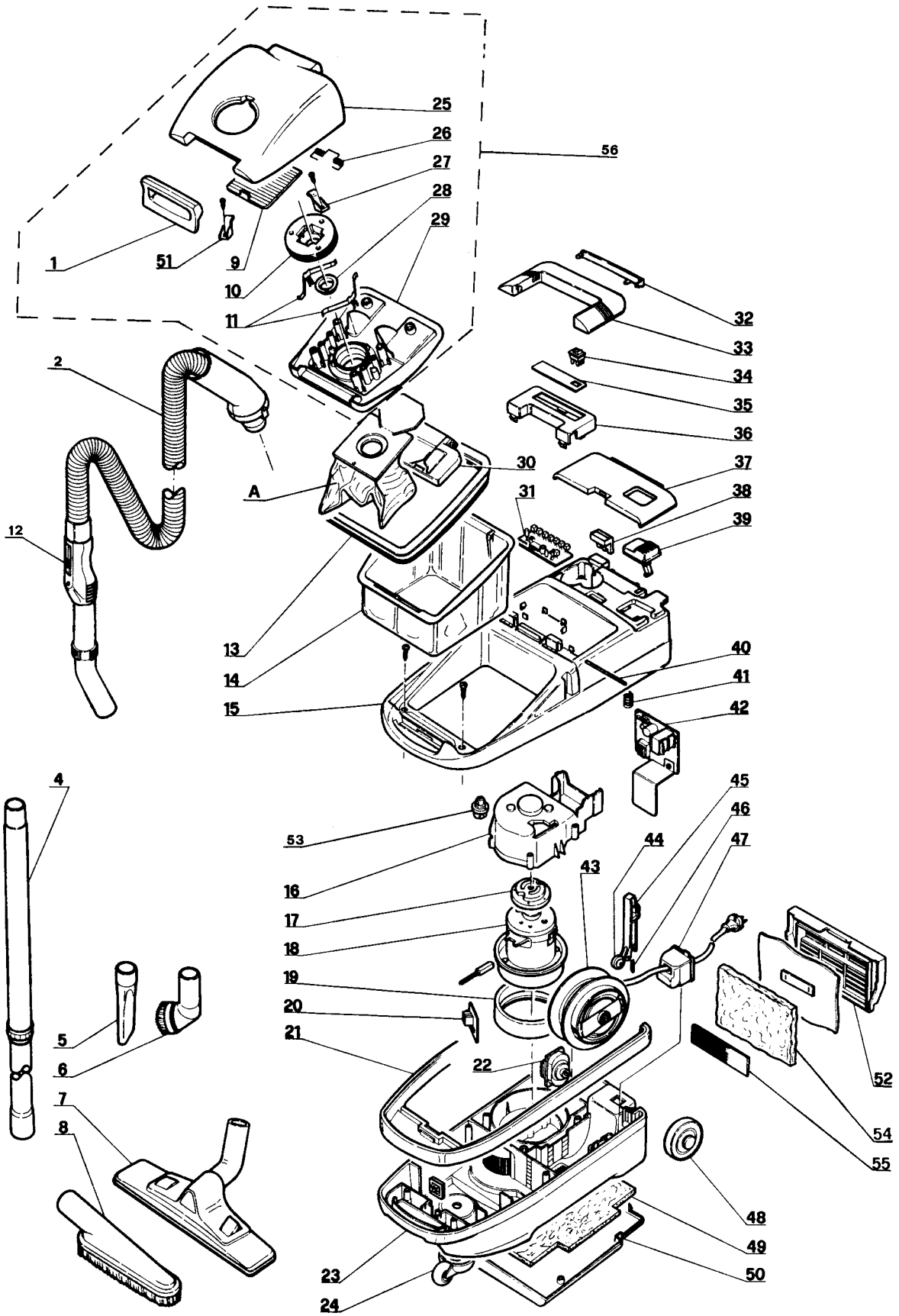

DLS SERVICE

DE’LONGHI ’INT’ XS1200D tubi crom. 0-03242

Pos	Codice	Italiano	English	Francais	Deutsch	Espanol
	PS1012	ISTRUZIONI	INSTRUCTION BOOK	MODE D’EMPLOI	BEDIENUNGSANLEITUNG	ISTRUCCION
	PS1053	SCATOLA IMBALLO	CARTON PACKAGING	CARTON D’EMBALLAGE	VERPACKUNGSKARTON	CAJA EMBALAJE
001	**PS1001**	LEVA	LEVER	LEVIER	HEBEL	PALANCA
002	**PS1002**	TUBO FLESSIBILE	FLEXIBLE TUBE	TUBE FLESSIBLE	SCHLAUCH	TUBO FLEXIBLE
004	**VT108502**	TUBO	TUBE	TUBE	ROHR	TUBO
005	**PS1005**	BOCCHETTA	VENT	SUCEUR	DUESE	BOQUILLA
006	**PS1006**	SPAZZOLA	BRUSH	BROSSE	BUERSTE	CEPILLO
007	**VT501166**	SPAZZOLA	BRUSH	BROSSE	BUERSTE	CEPILLO
008	**PS1008**	SPAZZOLA	BRUSH	BROSSE	BUERSTE	CEPILLO
009	**PS1009**	SPORTELLINO	DOOR	PORTILLON	KLAPPE	PORTILLO
010	**PS1010**	FLANGIA	FLANGE	BRIDE	FLANSCH	BRIDA
011	**PS1011**	LINGUETTA	TAB	LANGUETTE	LASCHE	LENGÜETA
012	**PS1056**	POTENZIOMETRO	POTENTIOMETER	POTENTIOMETRE	POTENTIOMETER	POTENCIOMETRO
013	**PS1013**	GUARNIZIONE	GASKET	JOINT	DICHTUNG	GUARNICION
014	**PS1014**	SACCO	BAG	SAC	BEUTEL	SACO
015	**PS1015**	CORPO	SHELL	CORPS	KOERPER	CUERPO
016	**PS1016**	COPERTURA	COVER	COUVERTURE	VERSCHLUSS	REVESTIMIENTO
017	**PS1017**	SUPPORTO	SUPPORT	SUPPORT	HALTER	SOPORTE
018	**PS1018**	MOTORE	MOTOR	MOTEUR	MOTOR	MOTOR
019	**PS1019**	GUARNIZIONE	GASKET	JOINT	DICHTUNG	GUARNICION
020	**PS1020**	SCHEDA	BOARD	FICHE	PLATINE	FICHA
021	**PS1021**	PARACOLPI	BUMPER	PARE CHOCS	PUFFER	PARAGOLPES
022	**PS1022**	SUPPORTO	SUPPORT	SUPPORT	HALTER	SOPORTE
023	**PS1023**	BASAMENTO	BASE	SOCLE	UNTERGESTELL	BASE
024	**PS1024**	RUOTA	CASTOR	ROULETTE	RAD	RUEDA
025	**PS1025**	COPERCHIO	COVER	COUVERCLE	DECKEL	TAPA
026	**PS1026**	MOLLA	SPRING	RESSORT	FEDER	MUELLE
027	**PS1027**	GANCIO	HOOK	CROCHET	HAKEN	GANCHO
028	**PS1028**	ANELLO	RING	ANNEAU	RING	ANILLO
029	**PS1029**	SUPPORTO	SUPPORT	SUPPORT	HALTER	SOPORTE
030	**PS1030**	PROTEZIONE	PROTECTION	PROTECTION	SCHUTZ	PROTECCION
031	**PS1031**	SCHEDA	BOARD	FICHE	PLATINE	FICHA
032	**PS1032**	PROFILO	PROFILE	PROFIL	LEISTE	PERFIL
033	**PS1033**	MANIGLIA	HANDLE	POIGNEE	GRIFF	MANILLA
034	**PS1034**	INTERRUTTORE	SWITCH	INTERRUPTEUR	SCHALTER	INTERRUPTOR
035	**PS1035**	MASCHERINA	TEMPLATE	PLAQUE	BLENDE	PLANTILLA
036	**PS1036**	SUPPORTO	SUPPORT	SUPPORT	HALTER	SOPORTE
037	**PS1037**	COPERCHIETTO	COVER	COUVERCLE	DECKEL	TAPADERA
038	**PS1038**	TASTO	PUSH BUTTON	POUSSOIR	TASTE	TECLA
039	**PS1039**	TASTO	PUSH BUTTON	POUSSOIR	TASTE	TECLA
040	**PS1040**	PERNO	PIN	PIVOT	STIFT	PERNO
041	**PS1041**	MOLLA	SPRING	RESSORT	FEDER	MUELLE
042	**PS1042**	SCHEDA	BOARD	FICHE	PLATINE	FICHA
043	**PS1043**	AVVOLGICAVO	CABLE WINDER	ENROULEUR	KABELAUFWICKLUNG	De Cable Recogecables
044	**PS1044**	RUOTA	CASTOR	ROULETTE	RAD	RUEDA
045	**PS1045**	ASTA	ROD	TIGE	STANGE	BARRA
046	**PS1046**	MOLLA	SPRING	RESSORT	FEDER	MUELLE
047	**PS1047**	PASSACAVO	CABLE GROMMET	PASSE CABLE	KABELDURCHGANG	AISLADOR
048	**PS1048**	RUOTA	CASTOR	ROULETTE	RAD	RUEDA
049	**PS1049**	ISOLANTE	INSULATOR	ISOLANT	ISOLIERSTOFF	AISLANTE
050	**PS1050**	FONDO	BOTTOM	FOND	BODEN	FONDO
051	**PS1051**	GANCIO	HOOK	CROCHET	HAKEN	GANCHO
052	**PS1052**	GRIGLIA	GRID	GRILLE	GITTER	PARRILLA
053	**PS1057**	PRESSOSTATO	PRESSURE Switch	PRESSOSTAT	DRUCKWAECHTER	PRESOSTATO
054	**PS1054**	FILTRO	FILTER	FILTRE	FILTER	FILTRO
055	**PS1055**	FILTRO	FILTER	FILTRE	FILTER	FILTRO
056	**PS1058**	COPERCHIO	COVER	COUVERCLE	DECKEL	TAPA