DēLonghi

SERVICE

0118500020

DE'LONGHI "INT" W 91LUX

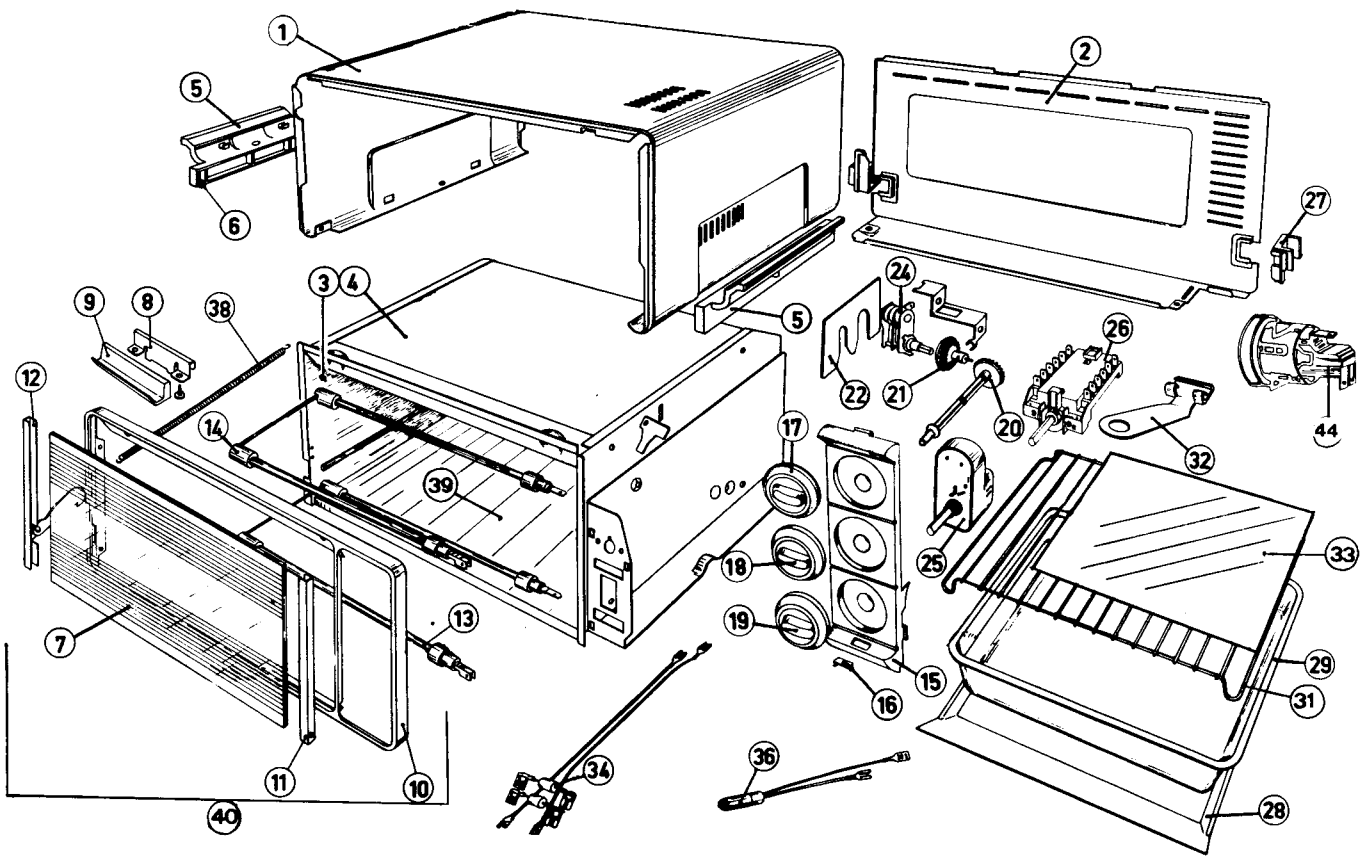

DLS SERVICE

# DE’LONGHI ’INT’ W91LUX 0118500020

| Pos | Codice | Italiano | English | Francais | Deutsch | Espanol |
|---|---|---|---|---|---|---|
| | **566068** | POLISTIROLO SUP. | POLYSTYRENE UPPER | POLYSTYRENE SUP. | STYROPOR OBEN | POLIESTIROL SUP. |
| | **566069** | POLISTIROLO INF. | POLYSTYRENE LOWER | POLYSTYRENE INF. | STYROPOR UNTEN | POLIESTIROL INF. |
| | **566223** | SCATOLA IMBALLO | CARTON PACKAGING | CARTON D'EMBALLAGE | VERPACKUNGSKARTON | CAJA EMBALAJE |
| | **571512** | RICETTARIO | RECIPE BOOK | LIVRE DE RECETTAS | KOCHBUCH | RECETAS |
| | **572904** | ISTRUZIONI | INSTRUCTION BOOK | MODE D'EMPLOI | BEDIENUNGSANLEITUNG | ISTRUCCION |
| 001 | **706561** | INVOLUCRO | CASING | ENVELOPPE | GEHAEUSE | ENVOLTURA |
| 002 | **690259** | SCHIENALE | REAR PANEL | PANNEAU ARRIERE | RUECKWAND | RESPALDO |
| 003 | **731615** | CAVITA | CAVITY | CAVITE | HOHLRAUM | CAVIDAD |
| 004 | **690088** | SEPARATORE | SEPARATOR | SEPARATEUR | TRENNER | SEPARADOR |
| 005 | **551895** | PIEDINO | FOOT | PIED | FUSS | PIE |
| 006 | **531847** | GOMMINO | RUBBER PAD | PARE CHOCS | PUFFER | GUARNICION |
| 007 | **591289** | VETRO | GLASS | VERRE | GLAS | VIDRIO |
| 008 | **706564** | SQUADRETTA | BRACKET | EQUERRE | WINKEL | ESCUADRA |
| 009 | **534122** | MANIGLIA | HANDLE | POIGNEE | GRIFF | MANILLA |
| 010 | **706565** | CORNICE | FRAME | ENCADREMENT | RAHMEN | MARCO |
| 011 | **706563** | PROFILO DX | PROFILE RIGHT | PROFIL DROITE | LEISTE RECHTS | PERFIL DERECHO |
| 012 | **706562** | PROFILO SX | PROFILE LEFT | PROFIL GAUCHE | LEISTE LINKS | PERFIL IZQUIERDO |
| 013 | **511573** | RESISTENZA INF. | Heating Element Lower | Element Chauffant Inf. | HEIZELEMENT UNTEN | RESISTENCIA INF. |
| 014 | **511714** | RESISTENZA SUP. | Heating Element Upper | Element Chauffant Sup. | HEIZELEMENT OBEN | RESISTENCIA SUP. |
| 015 | **591291** | CRUSCOTTO | CONTROL PANEL | Tableau de Commande | BEDIENUNGSBLENDE | Marco Panel Mandos |
| 016 | **533425** | GEMMA ROSSA | RED LENS | LENTILLE ROUGE | LINSE ROT | PILOTO ROJO |
| 017 | **591286** | MANOPOLA | KNOB | BOUTON | KNOPF | MANDO |
| 018 | **591290** | MANOPOLA COUPATAN | KNOB COUPATAN | BOUTON COUPATAN | KNOPF COUPATAN | MANDO COUPATAN |
| 019 | **591287** | MANOPOLA | KNOB | BOUTON | KNOPF | MANDO |
| 020 | **531664** | PROLUNGA | EXTENSION | RALLONGE | VERLAENGERUNG | PROLONGACION |
| 021 | **531663** | INGRANAGGIO | GEAR | ENGRENAGE | GETRIEBE | ENGRANAJE |
| 022 | **531693** | PROTEZIONE | PROTECTION | PROTECTION | SCHUTZ | PROTECCION |
| 024 | **521073** | TERMOSTATO | THERMOSTAT | THERMOSTAT | THERMOSTAT | TERMOSTATO |
| 025 | **521065** | TIMER COUPATAN | TIMER COUPATAN | PROGRAMMATEUR COUPATAN | TIMER COUPATAN | TIMER COUPATAN |
| 026 | **511384** | COMMUTATORE | Change Over Switch | COMMUTATEUR | UMSCHALTER | CONMUTADOR |
| 027 | **531646** | DISTANZIALE | SPACER | ENTRETOISE | DISTANZSTUECK | DISTANCIADOR |
| 028 | **702290** | CASSETTO | DRAWER | TIROIR | SCHUBFACH | CAJON |
| 029 | **702340** | PIATTO | PLATE | PLAT | TELLER | PLATO |
| 031 | **611229** | GRIGLIA COTT. | WIRE RACK | GRILLE | ROST | PARRILLA |
| 032 | **702399** | IMPUGNATURA | HANDLE | POIGNEE | GRIFF | EMPUÑADURA |
| 033 | **690083** | BISCOTTIERA | PASTRY TRAY | PLAQUE A PATISSERIE | BACKBLECH | BIZCOCHERA |
| 034 | **512196** | DIODO | DIODE | DIODE | DIODE | DIODO |
| 036 | **511381** | SPIA | WARNING LIGHT | TEMOIN LUMINEUX | KONTROLLEUCHTE | PILOTO |
| 038 | **611228** | MOLLA | SPRING | RESSORT | FEDER | MUELLE |
| 039 | **690085** | FONDO | BOTTOM | FOND | BODEN | FONDO |
| 040 | **733949** | PORTA+VETRO | DOOR+GLASS | PORTE+VERRE | TUER+GLAS | PUERTA+VIDRIO |
| 044 | **511432** | PORTALAMPADA | LAMP HOLDER | DOUILLE | LAMPENSOCKEL | PORTALAMPARAS |