0118500039

DE'LONGHI "EU" W 81S CE

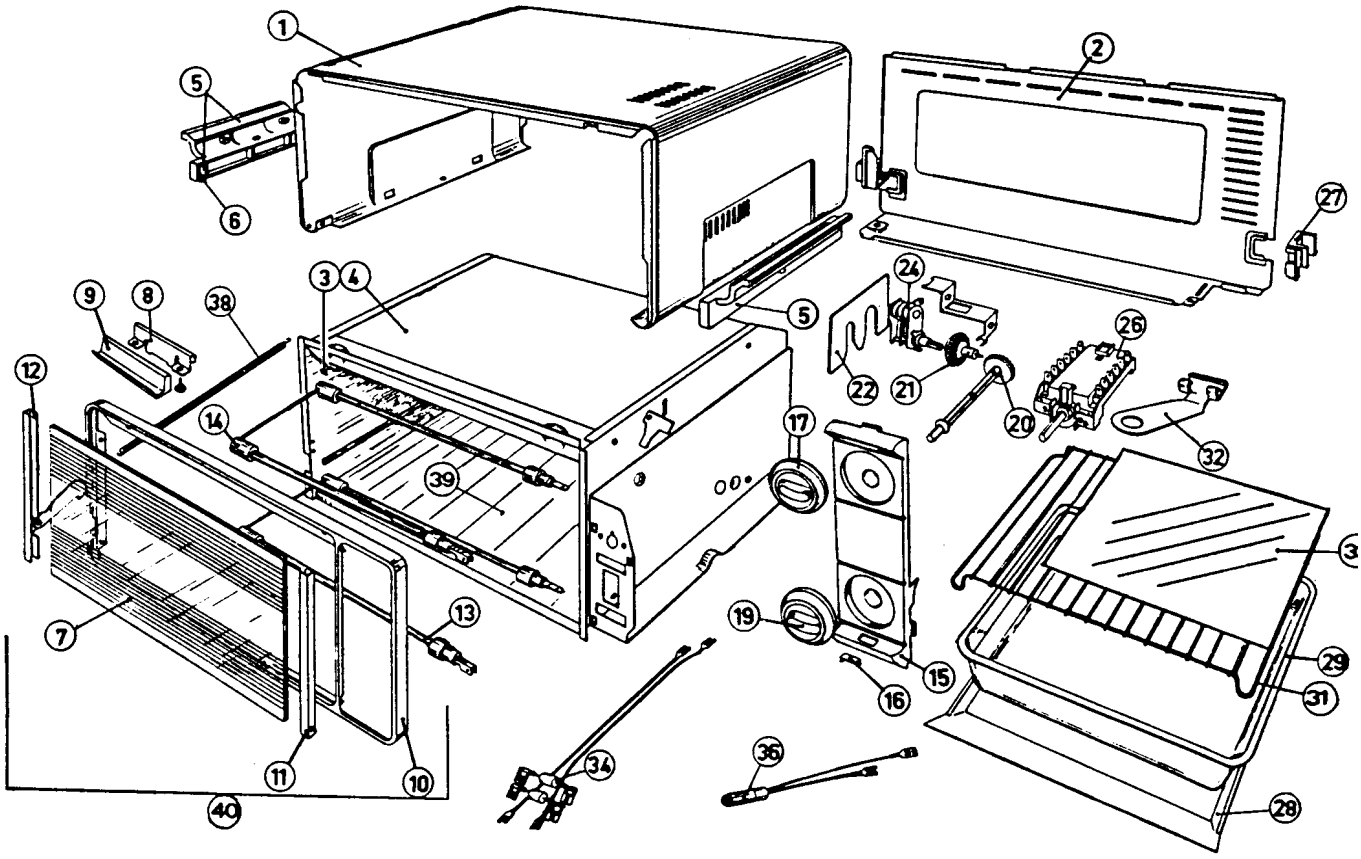

DLS SERVICE

DE’LONGHI ’EU’ W 81S ce 0118500039

Pos	Codice	Italiano	English	Francais	Deutsch	Espanol
	566068	POLISTIROLO SUP.	POLYSTYRENE UPPER	POLYSTYRENE SUP.	STYROPOR OBEN	POLIESTIROL SUP.
	566069	POLISTIROLO INF.	POLYSTYRENE LOWER	POLYSTYRENE INF.	STYROPOR UNTEN	POLIESTIROL INF.
	569710	SCATOLA IMBALLO	CARTON PACKAGING	CARTON D'EMBALLAGE	VERPACKUNGSKARTON	CAJA EMBALAJE
	573507	ISTRUZIONI	INSTRUCTION BOOK	MODE D'EMPLOI	BEDIENUNGSANLEITUNG	ISTRUCCION
001	**706561**	INVOLUCRO	CASING	ENVELOPPE	GEHAEUSE	ENVOLTURA
002	**690259**	SCHIENALE	REAR PANEL	PANNEAU ARRIERE	RUECKWAND	RESPALDO
003	**731613**	CAVITA	CAVITY	CAVITE	HOHLRAUM	CAVIDAD
004	**690088**	SEPARATORE	SEPARATOR	SEPARATEUR	TRENNER	SEPARADOR
005	**551895**	PIEDINO	FOOT	PIED	FUSS	PIE
006	**531847**	GOMMINO	RUBBER PAD	PARE CHOCS	PUFFER	GUARNICION
007	**591289**	VETRO	GLASS	VERRE	GLAS	VIDRIO
008	**706564**	SQUADRETTA	BRACKET	EQUERRE	WINKEL	ESCUADRA
009	**534122**	MANIGLIA	HANDLE	POIGNEE	GRIFF	MANILLA
010	**706565**	CORNICE	FRAME	ENCADREMENT	RAHMEN	MARCO
011	**706563**	PROFILO DX	PROFILE RIGHT	PROFIL DROITE	LEISTE RECHTS	PERFIL DERECHO
012	**706562**	PROFILO SX	PROFILE LEFT	PROFIL GAUCHE	LEISTE LINKS	PERFIL IZQUIERDO
013	**512560**	RESISTENZA INF.	Heating Element Lower	Element Chauffant Inf.	HEIZELEMENT UNTEN	RESISTENCIA INF.
014	**511714**	RESISTENZA SUP.	Heating Element Upper	Element Chauffant Sup.	HEIZELEMENT OBEN	RESISTENCIA SUP.
015	**591288**	CRUSCOTTO	CONTROL PANEL	Tableau de Commande	BEDIENUNGSBLENDE	Marco Panel Mandos
016	**533425**	GEMMA ROSSA	RED LENS	LENTILLE ROUGE	LINSE ROT	PILOTO ROJO
017	**591286**	MANOPOLA	KNOB	BOUTON	KNOPF	MANDO
019	**591307**	MANOPOLA	KNOB	BOUTON	KNOPF	MANDO
020	**531664**	PROLUNGA	EXTENSION	RALLONGE	VERLAENGERUNG	PROLONGACION
021	**531663**	INGRANAGGIO	GEAR	ENGRENAGE	GETRIEBE	ENGRANAJE
022	**531693**	PROTEZIONE	PROTECTION	PROTECTION	SCHUTZ	PROTECCION
024	**521073**	TERMOSTATO	THERMOSTAT	THERMOSTAT	THERMOSTAT	TERMOSTATO
026	**521502**	COMMUTATORE	Change Over Switch	COMMUTATEUR	UMSCHALTER	CONMUTADOR
027	**531646**	DISTANZIALE	SPACER	ENTRETOISE	DISTANZSTUECK	DISTANCIADOR
028	**702290**	CASSETTO	DRAWER	TIROIR	SCHUBFACH	CAJON
029	**702340**	PIATTO	PLATE	PLAT	TELLER	PLATO
031	**611229**	GRIGLIA COTT.	WIRE RACK	GRILLE	ROST	PARRILLA
032	**702399**	IMPUGNATURA	HANDLE	POIGNEE	GRIFF	EMPUÑADURA
033	**690083**	BISCOTTIERA	PASTRY TRAY	PLAQUE A PATISSERIE	BACKBLECH	BIZCOCHERA
034	**512196**	DIODO	DIODE	DIODE	DIODE	DIODO
036	**511381**	SPIA	WARNING LIGHT	TEMOIN LUMINEUX	KONTROLLEUCHTE	PILOTO
038	**611228**	MOLLA	SPRING	RESSORT	FEDER	MUELLE
039	**690085**	FONDO	BOTTOM	FOND	BODEN	FONDO
040	**733949**	PORTA+VETRO	DOOR+GLASS	PORTE+VERRE	TUER+GLAS	PUERTA+VIDRIO