DeLonghi

SERVICE

0128200106

DE'LONGHI "INT" VV 10B

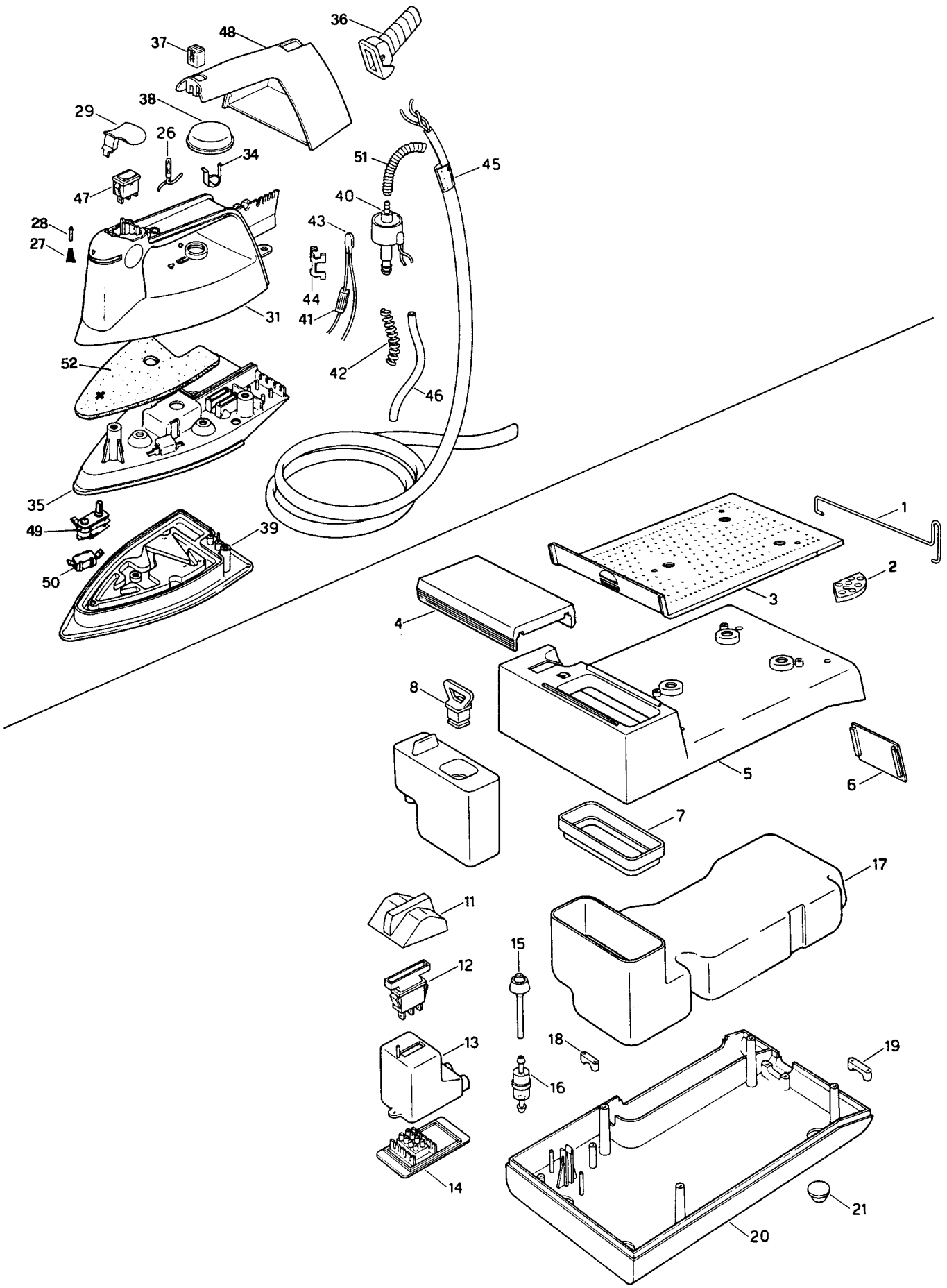

DLS SERVICE

DE’LONGHI ’INT’ VV10B 0128200106

Pos	Codice	Italiano	English	Francais	Deutsch	Espanol
001	**611788**	FERMO	STOP	ARRET	SPERRUNG	TOPE
002	**534214**	GOMMINO	RUBBER PAD	PARE CHOCS	PUFFER	GUARNICION
003	**707120**	FONDO	BOTTOM	FOND	BODEN	FONDO
004	**534788**	COPERCHIO	COVER	COUVERCLE	DECKEL	TAPA
005	**591979**	COPERCHIO	COVER	COUVERCLE	DECKEL	TAPA
006	**592163**	MOSTRINA	PLATE	PLAQUE	PLATTE	PLACA
007	**534222**	TAPPO	STOPPER	BOUCHON	STOEPSEL	TAPON
008	**534220**	TAPPO	STOPPER	BOUCHON	STOEPSEL	TAPON
011	**591480**	MOSTRINA	PLATE	PLAQUE	PLATTE	PLACA
012	**512145**	INTERRUTTORE	SWITCH	INTERRUPTEUR	SCHALTER	INTERRUPTOR
013	**535333**	SUPPORTO	SUPPORT	SUPPORT	HALTER	SOPORTE
014	**534205**	FONDO	BOTTOM	FOND	BODEN	FONDO
015	**534791**	RACCORDO	CONNECTION	RACCORD	ANSCHLUSS	JUNTURA
016	**534258**	FILTRO	FILTER	FILTRE	FILTER	FILTRO
017	**534790**	SERBATOIO	TANK	RESERVOIR	TANK	DEPOSITO
018	**534218**	SERRACAVO	WIRE CLAMP	SERRE CABLE	KABELSCHELLE	GRAPA
019	**534956**	SERRACAVO	WIRE CLAMP	SERRE CABLE	KABELSCHELLE	GRAPA
020	**552213**	FONDO	BOTTOM	FOND	BODEN	FONDO
021	**534213**	PIEDINO	FOOT	PIED	FUSS	PIE
026	**512144**	LAMPADA	LAMP	LAMPE	LAMPE	LAMPARA
027	**611697**	MOLLA	SPRING	RESSORT	FEDER	MUELLE
028	**535488**	PERNO	PIN	PIVOT	STIFT	PERNO
029	**591482**	TASTO	PUSH BUTTON	POUSSOIR	TASTE	TECLA
031	**591602**	IMPUGNATURA	HANDLE	POIGNEE	GRIFF	EMPUÑADURA
034	**606525**	PERNO	PIN	PIVOT	STIFT	PERNO
035	**733900**	CRUSCOTTO	CONTROL PANEL	Tableau de Commande	BEDIENUNGSBLENDE	Marco Panel Mandos
036	**534217**	PASSACAVO	CABLE GROMMET	PASSE CABLE	KABELDURCHGANG	AISLADOR
037	**534221**	TAPPO	STOPPER	BOUCHON	STOEPSEL	TAPON
038	**591583**	MANOPOLA	KNOB	BOUTON	KNOPF	MANDO
039	**552227**	PIASTRA	PLATE	PLAQUE	PLATTE	PLACA
040	**552011**	POMPA	PUMP	POMPE	PUMPE	BOMBA
041	**512141**	RESISTENZA	HEATING Element	ELEMENT Chauffant	HEIZELEMENT	RESISTENCIA
042	**611787**	MOLLA	SPRING	RESSORT	FEDER	MUELLE
043	**512259**	INTERRUTTORE	SWITCH	INTERRUPTEUR	SCHALTER	INTERRUPTOR
044	**611790**	SUPPORTO	SUPPORT	SUPPORT	HALTER	SOPORTE
045	**551909**	TUBO	TUBE	TUBE	ROHR	TUBO
046	**534257**	TUBO	TUBE	TUBE	ROHR	TUBO
047	**512142**	INTERRUTTORE	SWITCH	INTERRUPTEUR	SCHALTER	INTERRUPTOR
048	**592050**	IMPUGNATURA	HANDLE	POIGNEE	GRIFF	EMPUÑADURA
049	**521285**	TERMOSTATO	THERMOSTAT	THERMOSTAT	THERMOSTAT	TERMOSTATO
050	**521286**	TCO	TCO	SECURITE DE SURCHAUFFAGE	UEBERTEMPERATURSICHERUNG	FUSIBILE TERMICO
051	**611717**	GUAINA	SHEATH	GAINE	SCHUTZMANTEL	VAINA
052	**535046**	ISOLANTE	INSULATOR	ISOLANT	ISOLIERSTOFF	AISLANTE