DēLonghi SERVICE

0-020100

DE'LONGHI "INT" V-81

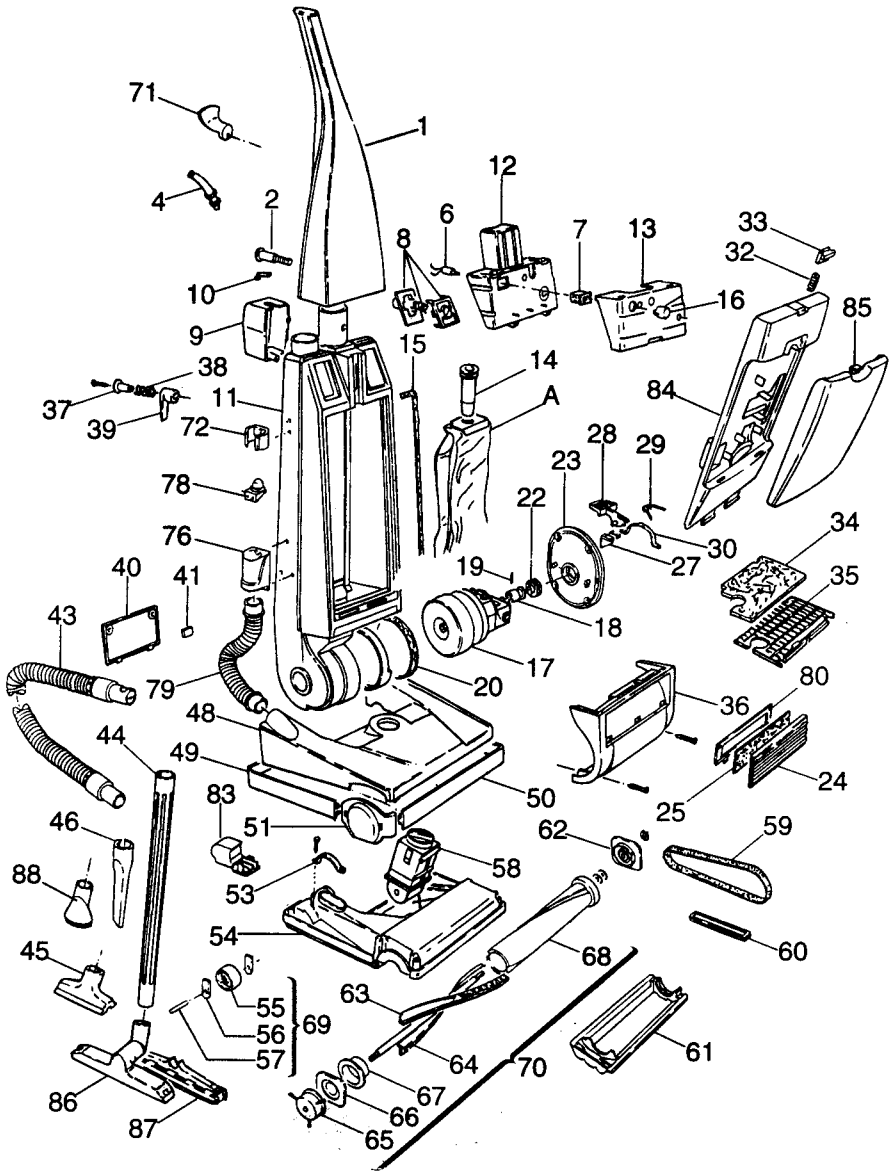

DLS SERVICE

DE'LONGHI 'INT' V-81 0-020100

Pos	Codice	Italiano	English	Francais	Deutsch	Espanol
	VT318172	ISTRUZIONI	INSTRUCTION BOOK	MODE D'EMPLOI	BEDIENUNGSANLEITUNG	ISTRUCCION
	VT418023	SCATOLA IMBALLO	CARTON PACKAGING	CARTON D'EMBALLAGE	VERPACKUNGSKARTON	CAJA EMBALAJE
001	**VT518933**	MANICO	HANDLE	MANCHE	GRIFF	MANGO
002	**VT218000**	VITE	SCREW	VIS	SCHRAUBE	TORNILLO
004	**VT105520**	PASSACAVO	CABLE GROMMET	PASSE CABLE	KABELDURCHGANG	AISLADOR
006	**VT117671**	SPIA	WARNING LIGHT	TEMOIN LUMINEUX	KONTROLLEUCHTE	PILOTO
007	**512572**	INTERRUTTORE	SWITCH	INTERRUPTEUR	SCHALTER	INTERRUPTOR
008	**VT518206**	ALLARME	ALARM	ALARME	ALARM	ALARMA
009	**VT209003**	COPERTURA	COVER	COUVERTURE	VERSCHLUSS	REVESTIMIENTO
010	**534989**	CAVALLOTTO	U-BOLT	SUPPORT	HALTEBUEGEL	HIERRO ENU
011	**VT518994**	CONTENITORE	CONTAINER	RESERVOIR	BEHAELTER	CONTENEDOR
012	**VT218661**	TELAIO	FRAME	CHASSIS	RAHMEN	CHASIS
013	**VT599029**	CRUSCOTTO	CONTROL PANEL	Tableau de Commande	BEDIENUNGSBLENDE	Marco Panel Mandos
014	**VT509110**	BOCCHETTONE	PIPE UNION	RACCORD DE TUYAU	ANSCHLUSSSTUTZEN	BOCA
015	**VT109440**	GUARNIZIONE	GASKET	JOINT	DICHTUNG	GUARNICION
016	**VT218700**	TASTO	PUSH BUTTON	POUSSOIR	TASTE	TECLA
017	**VT109005**	MOTORE	MOTOR	MOTEUR	MOTOR	MOTOR
018	**VT518180**	PIGNONE	PINION	PIGNON	RITZEL	PIÑON
019	**VT109741**	SPINA	PLUG	FICHE	STECKER	PERNO
020	**VT209371**	GUARNIZIONE	GASKET	JOINT	DICHTUNG	GUARNICION
022	**VT209610**	GHIERA	RING NUT	COLLIER DE SERR.	NUTMUTTER	CASQUILLO
023	**VT509933**	COPERCHIO	COVER	COUVERCLE	DECKEL	TAPA
024	**VT218487**	MASCHERINA	TEMPLATE	PLAQUE	BLENDE	PLANTILLA
025	**VT118235**	FILTRO	FILTER	FILTRE	FILTER	FILTRO
027	**VT218510**	CAVALLOTTO	U-BOLT	SUPPORT	HALTEBUEGEL	HIERRO ENU
028	**VT212650**	PEDALE	PEDAL	PEDALE	PEDAL	PEDAL
029	**VT109410**	MOLLA	SPRING	RESSORT	FEDER	MUELLE
030	**VT109600**	CAVALLOTTO	U-BOLT	SUPPORT	HALTEBUEGEL	HIERRO ENU
032	**VT118270**	MOLLA	SPRING	RESSORT	FEDER	MUELLE
033	**VT218359**	FERMO	STOP	ARRET	SPERRUNG	TOPE
034	**VT509073**	FILTRO	FILTER	FILTRE	FILTER	FILTRO
035	**VT216040**	GRIGLIA	GRID	GRILLE	GITTER	PARRILLA
036	**VT209517**	CARTER	CRANK CASE	ENVELOPPE	GEHAEUSE	CARTER
037	**VT212641**	PERNO	PIN	PIVOT	STIFT	PERNO
038	**VT112320**	MOLLA	SPRING	RESSORT	FEDER	MUELLE
039	**VT218251**	GANCIO	HOOK	CROCHET	HAKEN	GANCHO
040	**VT209107**	COPERCHIETTO	COVER	COUVERCLE	DECKEL	TAPADERA
041	**VT109710**	CONDENSATORE ELETTRICO	CAPACITOR	CONDENSATEUR	KONDENSATOR	CONDENSADOR ELEC.
043	**VT518440**	TUBO	TUBE	TUBE	ROHR	TUBO
044	**VT116080**	TUBO	TUBE	TUBE	ROHR	TUBO
045	**VT109933**	BOCCHETTA	VENT	SUCEUR	DUESE	BOQUILLA
046	**VT109923**	BOCCHETTA	VENT	SUCEUR	DUESE	BOQUILLA
048	**VT524505**	CARTER	CRANK CASE	ENVELOPPE	GEHAEUSE	CARTER
049	**VT518244**	PARACOLPI	BUMPER	PARE CHOCS	PUFFER	PARAGOLPES
050	**VT518245**	PARACOLPI	BUMPER	PARE CHOCS	PUFFER	PARAGOLPES
051	**VT218190**	COPRIFORO	PLUG	CACHE TROU	STOEPSEL	CUBREAGUJERO
053	**VT109570**	CAVALLOTTO	U-BOLT	SUPPORT	HALTEBUEGEL	HIERRO ENU
054	**VT518123**	BASE	SUPPORT BASE	BASE D'APPUI	STUETZFLAECHE	SOPORTE
055	**VT212250**	RUOTA	CASTOR	ROULETTE	RAD	RUEDA
056	**VT209440**	GUIDA	RUNNER	GLISSIERE	FUEHRUNG	GUIA
057	**VT109350**	PERNO	PIN	PIVOT	STIFT	PERNO
058	**VT518028**	RUOTA	CASTOR	ROULETTE	RAD	RUEDA
059	**VT118082**	CINGHIA	BELT	COURROIE	RIEMEN	CORREA
060	**VT218030**	LISTELLO	FILLET	LISTEL	LEISTE	LISTEL
061	**VT218290**	BOCCHETTA	VENT	SUCEUR	DUESE	BOQUILLA
062	**VT518040**	SUPPORTO	SUPPORT	SUPPORT	HALTER	SOPORTE
063	**VT518071**	LISTELLO	FILLET	LISTEL	LEISTE	LISTEL
064	**VT518070**	LISTELLO	FILLET	LISTEL	LEISTE	LISTEL
065	**VT518081**	SPAZZOLINO	BRUSH	BROSSE	BUERSTCHEN	CEPILLO
066	**VT518190**	SUPPORTO	SUPPORT	SUPPORT	HALTER	SOPORTE
067	**VT118140**	FERMO	STOP	ARRET	SPERRUNG	TOPE
068	**VT518090**	RULLO	ROLLER	GALET	WALZE	RODILLO
069	**VT509923**	RUOTA	CASTOR	ROULETTE	RAD	RUEDA
070	**VT518130**	RULLO	ROLLER	GALET	WALZE	RODILLO
071	**VT218224**	GANCIO	HOOK	CROCHET	HAKEN	GANCHO
072	**VT218421**	SUPPORTO	SUPPORT	SUPPORT	HALTER	SOPORTE
076	**VT218441**	RACCORDO	CONNECTION	RACCORD	ANSCHLUSS	JUNTURA
078	**VT218431**	SUPPORTO	SUPPORT	SUPPORT	HALTER	SOPORTE
079	**VT518430**	TUBO FLESSIBILE	FLEXIBLE TUBE	TUBE FLESSIBLE	SCHLAUCH	TUBO FLEXIBLE
080	**VT218486**	TELAIO	FRAME	CHASSIS	RAHMEN	CHASIS
083	**VT218450**	SUPPORTO	SUPPORT	SUPPORT	HALTER	SOPORTE
084	**VT518167**	COPERCHIO	COVER	COUVERCLE	DECKEL	TAPA
085	**VT524300**	PORTINA	DOOR	PORTE	TUER	PUERTA
086	**VT507335**	CORPO	SHELL	CORPS	KOERPER	CUERPO
087	**VT507340**	SPAZZOLA	BRUSH	BROSSE	BUERSTE	CEPILLO
088	**VT109913**	PENNELLO	BRUSH	PINCEAU	PINSEL	PINCEL

DE'LONGHI 'INT' V-81 0-020100

Pos	Codice	Italiano	English	Francais	Deutsch	Espanol
AAA	**VT518896**	KIT SACCHI	BAGS KIT	KIT SACS	BEUTEL SATZ	JUEGO DE SACOS