DE'LONGHI "INT" PRO 261P

SELECTA

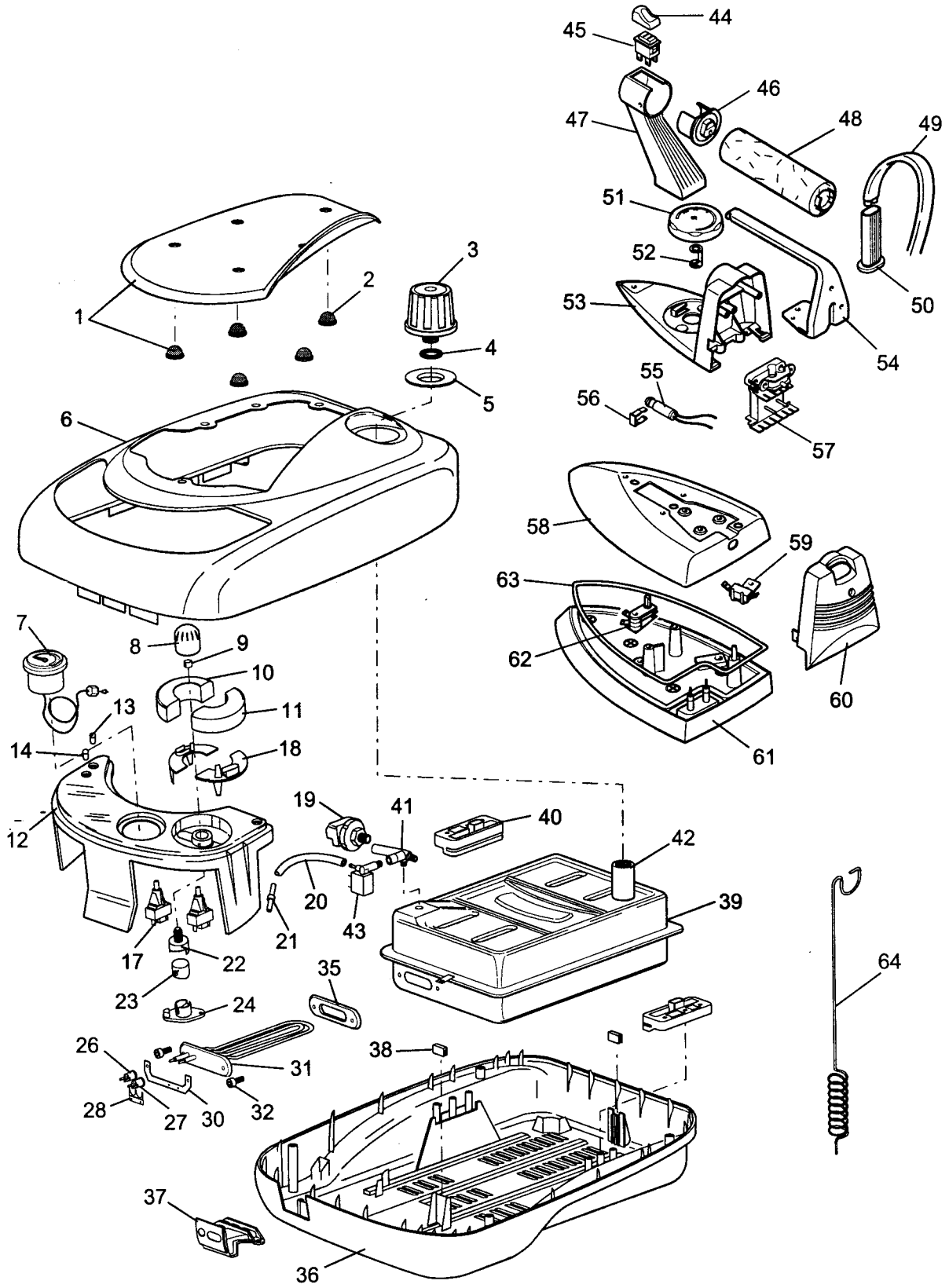

DLS SERVICE

DE'LONGHI 'INT' PRO261P 0128216801

Pos	Codice	Italiano	English	Francais	Deutsch	Espanol
01	**VT557202**	TAPPETO	RUBBER CARPET	TAPIS	GUMMITEPPICH	Alfombra de Caucho
02	**535156**	PIEDINO	FOOT	PIED	FUSS	PIE
03	**SC4524420**	TAPPO	STOPPER	BOUCHON	STOEPSEL	TAPON
04	**SC5804300**	O-RING	O-RING	JOINT OR	O-RING	O-RING
05	**SC5704010**	GUARNIZIONE	GASKET	JOINT	DICHTUNG	GUARNICION
06	**VT557163**	SCOCCA SUP.	BODY UPPER	CARROSSERIE sup.	KASTEN OBEN	CARCASA SUP.
07	**5228100100**	MANOMETRO	MANOMETER	MANOMETRE	DRUCKANZEIGER	MANOMETRO
08	**VT525036**	MANOPOLA	KNOB	BOUTON	KNOPF	MANDO
09	**611113**	ANELLO	RING	ANNEAU	RING	ANILLO
10	**VT525038**	TASTO BLU	Blue Push Button	POUSSOIR BLEU	TASTE BLAU	TECLA AZUR
11	**VT525037**	TASTO ROSSO	Red Push Button	POUSSOIR ROUGE	TASTE ROT	TECLA ROJO
12	**5928100100**	MASCHERINA	TEMPLATE	PLAQUE	BLENDE	PLANTILLA
13	**SC6824830**	GEMMA VERDE	GREEN LENS	LENTILLE VERTE	GRUENE LINSE	PILOTO VERDE
14	**VT257304**	GEMMA ROSSA	RED LENS	LENTILLE ROUGE	LINSE ROT	PILOTO ROJO
17	**SC24000038**	INTERRUTTORE	SWITCH	INTERRUPTEUR	SCHALTER	INTERRUPTOR
18	**VT257305**	SUPPORTO	SUPPORT	SUPPORT	HALTER	SOPORTE
19	**VT157324**	PRESSOSTATO	PRESSURE Switch	PRESSOSTAT	DRUCKWAECHTER	PRESOSTATO
20	**VT157600**	TUBETTO	TUBE	TUBE	ROHR	TUBITO
21	**SC26600022**	RACCORDO	CONNECTION	RACCORD	ANSCHLUSS	JUNTURA
22	**SC5654790**	TAPPO	STOPPER	BOUCHON	STOEPSEL	TAPON
23	**SC5654800**	PISTONE	PISTON	PISTON	KOLBEN	PISTON
24	**SC5654780**	BASE	SUPPORT BASE	BASE D'APPUI	STUETZFLAECHE	SOPORTE
26	**SC1771511**	TERMOSTATO 155°	THERMOSTAT 155°	THERMOSTAT 155°	THERMOSTAT 155°	TERMOSTATO 155°
27	**SC1771529**	TERMOSTATO 145°	THERMOSTAT 145°	THERMOSTAT 145°	THERMOSTAT 145°	TERMOSTATO 145°
28	**SC6404200**	PIASTRINA	PLATE	PLAQUETTE	PLAETTCHEN	PLAQUITA
30	**SC29990077**	SUPPORTO	SUPPORT	SUPPORT	HALTER	SOPORTE
31	**SC39990090**	RESISTENZA	HEATING Element	ELEMENT Chauffant	HEIZELEMENT	RESISTENCIA
32	**SC1002824**	VITE	SCREW	VIS	SCHRAUBE	TORNILLO
35	**SC29993057**	GUARNIZIONE	GASKET	JOINT	DICHTUNG	GUARNICION
36	**VT257021**	SCOCCA INF.	BODY LOWER	CARROSSERIE INF.	KASTEN UNTEN	CARCASA INF.
37	**VT257500**	FERMACAVO	WIRE CLAMP	SERRE CABLE	KABELBEFESTIGUNGSHUELSE	SUJETACABLE
38	**SC26010003**	GOMMINO	RUBBER PAD	PARE CHOCS	PUFFER	GUARNICION
39	**VT557300**	CALDAIA	BOILER	CHAUDIERE	HEIZKESSEL	CALDERA
40	**VT257303**	SUPPORTO	SUPPORT	SUPPORT	HALTER	SOPORTE
41	**VT157001**	RACCORDO	CONNECTION	RACCORD	ANSCHLUSS	JUNTURA
42	**VT157006**	PROLUNGA	EXTENSION	RALLONGE	VERLAENGERUNG	PROLONGACION
43	**VT157016**	ELETTROVALVOLA	SOLENOID VALVE	Soupape Electrique	SOLENOIDVENTIL	Valvula Solenoide
44	**VT205514**	TASTO	PUSH BUTTON	POUSSOIR	TASTE	TECLA
45	**512267**	PULSANTE	PUSH BUTTON	POUSSOIR	DRUCKKNOPF	BOTON
46	**535546**	FLANGIA	FLANGE	BRIDE	FLANSCH	BRIDA
47	**535948**	FRONTALE	FRONT PANEL	PANNEAU AVANT	VORDERWAND	PARTE DELANTERA
48	**VT505526**	IMPUGNATURA	HANDLE	POIGNEE	GRIFF	EMPUÑADURA
49	**VT157406**	TUBO	TUBE	TUBE	ROHR	TUBO
50	**534626**	PASSACAVO	CABLE GROMMET	PASSE CABLE	KABELDURCHGANG	AISLADOR
51	**VT525524**	MANOPOLA	KNOB	BOUTON	KNOPF	MANDO
52	**690057**	GIUNTO	JOINT	JOINT	KUPPLUNG	JUNTA
53	**VT505537**	SCOCCA	BODY	CARROSSERIE	KASTEN	CARCASA
54	**707140**	STAFFA	BRACKET	ETRIER	BUEGEL	ABRAZADERA
55	**512264**	SPIA	WARNING LIGHT	TEMOIN LUMINEUX	KONTROLLEUCHTE	PILOTO
56	**536665**	GEMMA GIALLA	YELLOW LENS	LENTILLE JAUNE	LINSE GELB	PILOTO AMARILLO
57	**534597**	SUPPORTO	SUPPORT	SUPPORT	HALTER	SOPORTE
58	**707139**	CALOTTA	COVER	CALOTTE	HAUBE	TAPA
59	**512299**	TERMOSTATO 315°	THERMOSTAT 315°	THERMOSTAT 315°	THERMOSTAT 315°	TERMOSTATO 315°
60	**VT525525**	FONDO	BOTTOM	FOND	BODEN	FONDO
61	**VT505969**	PIASTRA	PLATE	PLAQUE	PLATTE	PLACA
62	**512298**	TERMOSTATO	THERMOSTAT	THERMOSTAT	THERMOSTAT	TERMOSTATO
63	**534631**	GUARNIZIONE	GASKET	JOINT	DICHTUNG	GUARNICION
64	**SC33010005**	ASTA	ROD	TIGE	STANGE	BARRA