DLS service

0128114400

DE'LONGHI "INT" PRO 200P

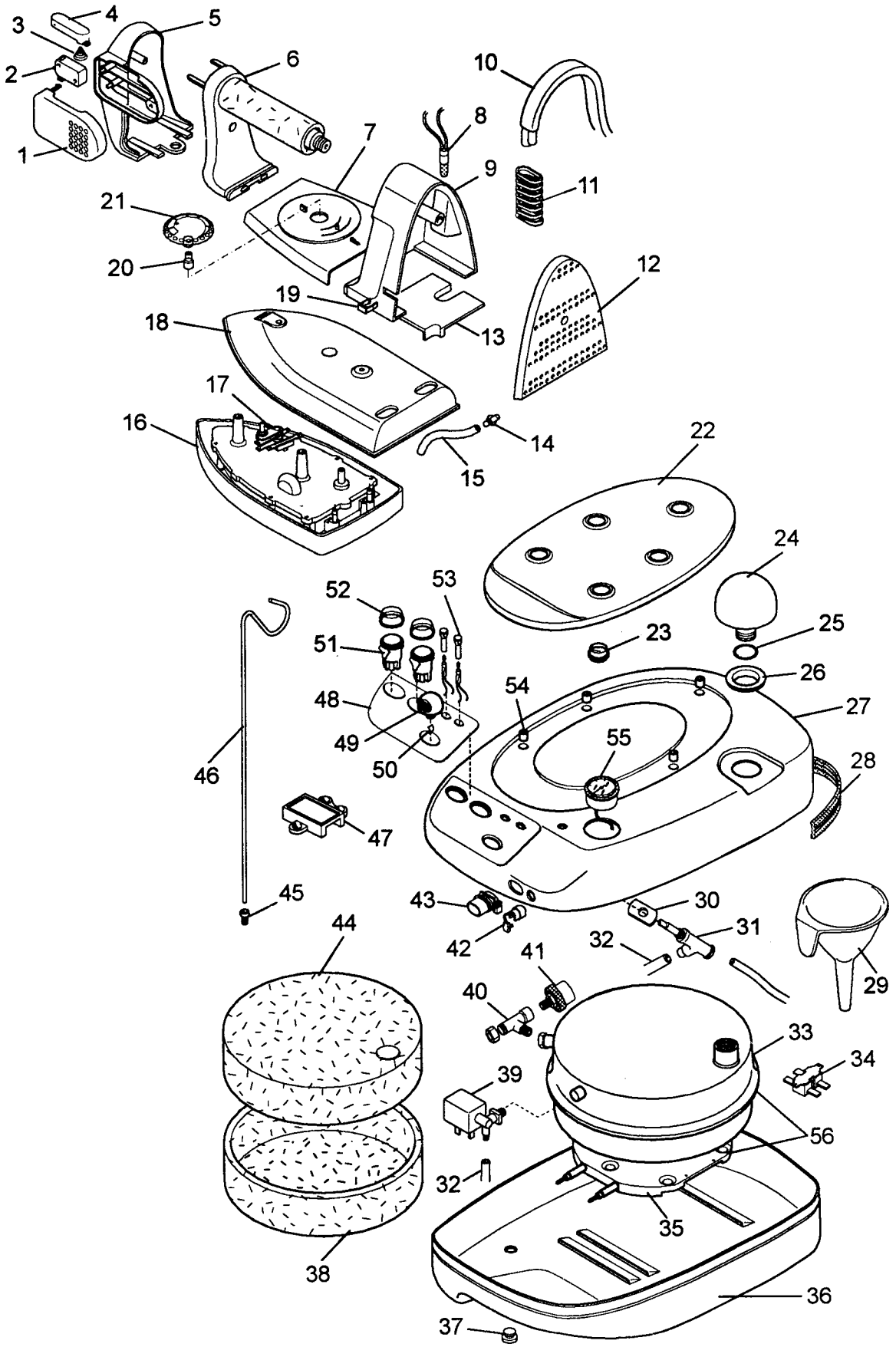

DLS SERVICE

DE'LONGHI 'INT' PRO 200P 0128114400

Pos	Codice	Italiano	English	Francais	Deutsch	Espanol
01	**SSD20172**	COPERCHIO	COVER	COUVERCLE	DECKEL	TAPA
02	**SSC20018**	MICROINTERRUTTORE	MICROSWITCH	MICRORUPTEUR	MIKROSCHALTER	MICROINTERRUPTOR
03	**SSD60056**	MOLLA	SPRING	RESSORT	FEDER	MUELLE
04	**SSD20076**	PULSANTE	PUSH BUTTON	POUSSOIR	DRUCKKNOPF	BOTON
05	**SSD20087**	SUPPORTO	SUPPORT	SUPPORT	HALTER	SOPORTE
06	**SSB30293**	MANICO	HANDLE	MANCHE	GRIFF	MANGO
07	**SSD20575**	CRUSCOTTO	CONTROL PANEL	Tableau de Commande	BEDIENUNGSBLENDE	Marco Panel Mandos
08	**SSC20010**	SPIA	WARNING LIGHT	TEMOIN LUMINEUX	KONTROLLEUCHTE	PILOTO
09	**SSD20081**	PASSACAVO	CABLE GROMMET	PASSE CABLE	KABELDURCHGANG	AISLADOR
10	**SSC30050**	TUBO	TUBE	TUBE	ROHR	TUBO
11	**SSD20204**	PASSACAVO	CABLE GROMMET	PASSE CABLE	KABELDURCHGANG	AISLADOR
12	**SSD20082**	PASSACAVO	CABLE GROMMET	PASSE CABLE	KABELDURCHGANG	AISLADOR
13	**SSD20163**	COPERCHIETTO	COVER	COUVERCLE	DECKEL	TAPADERA
14	**SSD20573**	PROLUNGA	EXTENSION	RALLONGE	VERLAENGERUNG	PROLONGACION
15	**SSD40018**	TUBETTO	TUBE	TUBE	ROHR	TUBITO
16	**SSB40077**	PIASTRA STIR.	IRONING PLATE	SEMELLE	SOHLE	PLACA
17	**SSC40043**	TERMOSTATO+TCO	THERMOSTAT+TCO	THERMOSTAT+TCO	THERMOSTAT+TCO	TERMOSTATO+TCO
18	**SSB30256**	CALOTTA	COVER	CALOTTE	HAUBE	TAPA
19	**SSC20011**	GEMMA	LENS	LENTILLE	LINSE	PILOTO
20	**SSD20223**	PROLUNGA	EXTENSION	RALLONGE	VERLAENGERUNG	PROLONGACION
21	**SSD20961**	MANOPOLA	KNOB	BOUTON	KNOPF	MANDO
22	**SSD20620**	TAPPETO	RUBBER CARPET	TAPIS	GUMMITEPPICH	Alfombra de Caucho
23	**SSD60230**	GOMMINO	RUBBER PAD	PARE CHOCS	PUFFER	GUARNICION
24	**SSD50006**	TAPPO	STOPPER	BOUCHON	STOEPSEL	TAPON
25	**SSD60072**	GUARNIZIONE	GASKET	JOINT	DICHTUNG	GUARNICION
26	**SSD60239**	GUARNIZIONE	GASKET	JOINT	DICHTUNG	GUARNICION
27	**SSB10151**	GUSCIO SUP.	PROTECTION Upper	ENVELOPPE SUP.	GEHAEUSE OBEN	VAINA SUP.
28	**SSD60232**	PARAURTI	BUMPER PUFFER	PARE CHOCS	PARE CHOCS	PARACHOQUES
29	**SSD60011**	IMBUTO	FUNNEL	ENTONNOIR	TRICHTER	EMBUDO
30	**SSB30086**	FERMO	STOP	ARRET	SPERRUNG	TOPE
31	**SSB20029**	RUBINETTO	TAP	ROBINET	HAHN	GRIFO
32	**SSD40012**	TUBO	TUBE	TUBE	ROHR	TUBO
33	**SSB30297**	CALDAIA	BOILER	CHAUDIERE	HEIZKESSEL	CALDERA
34	**SSC40040**	TERMOSTATO+TCO	THERMOSTAT+TCO	THERMOSTAT+TCO	THERMOSTAT+TCO	TERMOSTATO+TCO
35	**SSB40035**	RESISTENZA	HEATING Element	ELEMENT Chauffant	HEIZELEMENT	RESISTENCIA
36	**SSB10110**	GUSCIO INF.	PROTECTION LOWER	ENVELOPPE INF.	GEHAEUSE UNTEN	VAINA INF.
37	**SSD60003**	GOMMINO	RUBBER PAD	PARE CHOCS	PUFFER	GUARNICION
38	**SSD60280**	ISOLANTE	INSULATOR	ISOLANT	ISOLIERSTOFF	AISLANTE
39	**SSC40019**	ELETTROVALVOLA	SOLENOID VALVE	Soupape Electrique	SOLENOIDVENTIL	Valvula Solenoide
40	**SSB20059**	RACCORDO	CONNECTION	RACCORD	ANSCHLUSS	JUNTURA
41	**SSC40010**	PRESSOSTATO	PRESSURE Switch	PRESSOSTAT	DRUCKWAECHTER	PRESOSTATO
42	**SSD60229**	FERMACAVO	WIRE CLAMP	SERRE CABLE	KABELBEFESTIGUNGSHUELSE	SUJETACABLE
43	**SSD20204**	PASSACAVO	CABLE GROMMET	PASSE CABLE	KABELDURCHGANG	AISLADOR
44	**SSD60279**	ISOLANTE	INSULATOR	ISOLANT	ISOLIERSTOFF	AISLANTE
45	**SSB30040**	SUPPORTO	SUPPORT	SUPPORT	HALTER	SOPORTE
46	**SSD30003**	ASTA	ROD	TIGE	STANGE	BARRA
47	**SSD20405**	SUPPORTO	SUPPORT	SUPPORT	HALTER	SOPORTE
48	**SSD60374**	ETICHETTA	LABEL	ETIQUETTE	AUFKLEBER	ETIQUETA
49	**SSD20768**	MANOPOLA	KNOB	BOUTON	KNOPF	MANDO
50	**SSD60113**	MOLLA	SPRING	RESSORT	FEDER	MUELLE
51	**SSC20032**	INTERRUTTORE	SWITCH	INTERRUPTEUR	SCHALTER	INTERRUPTOR
52	**SSD60284**	CAPPUCCIO	CAP	CHAPEAU	KAPPE	CAPUCHON
53	**SSC20042**	SPIA	WARNING LIGHT	TEMOIN LUMINEUX	KONTROLLEUCHTE	PILOTO
54	**SSB20084**	DISTANZIALE	SPACER	ENTRETOISE	DISTANZSTUECK	DISTANCIADOR
55	**SSC40033**	MANOMETRO	MANOMETER	MANOMETRE	DRUCKANZEIGER	MANOMETRO
56	**SSB30298**	KIT CALDAIA	BOILER KIT	KIT CHAUDIERE	SATZ HEIZKESSEL	KIT CALDERA