0128660202

DE'LONGHI " INT " PRO 180
STIROMEGLIO MASTER

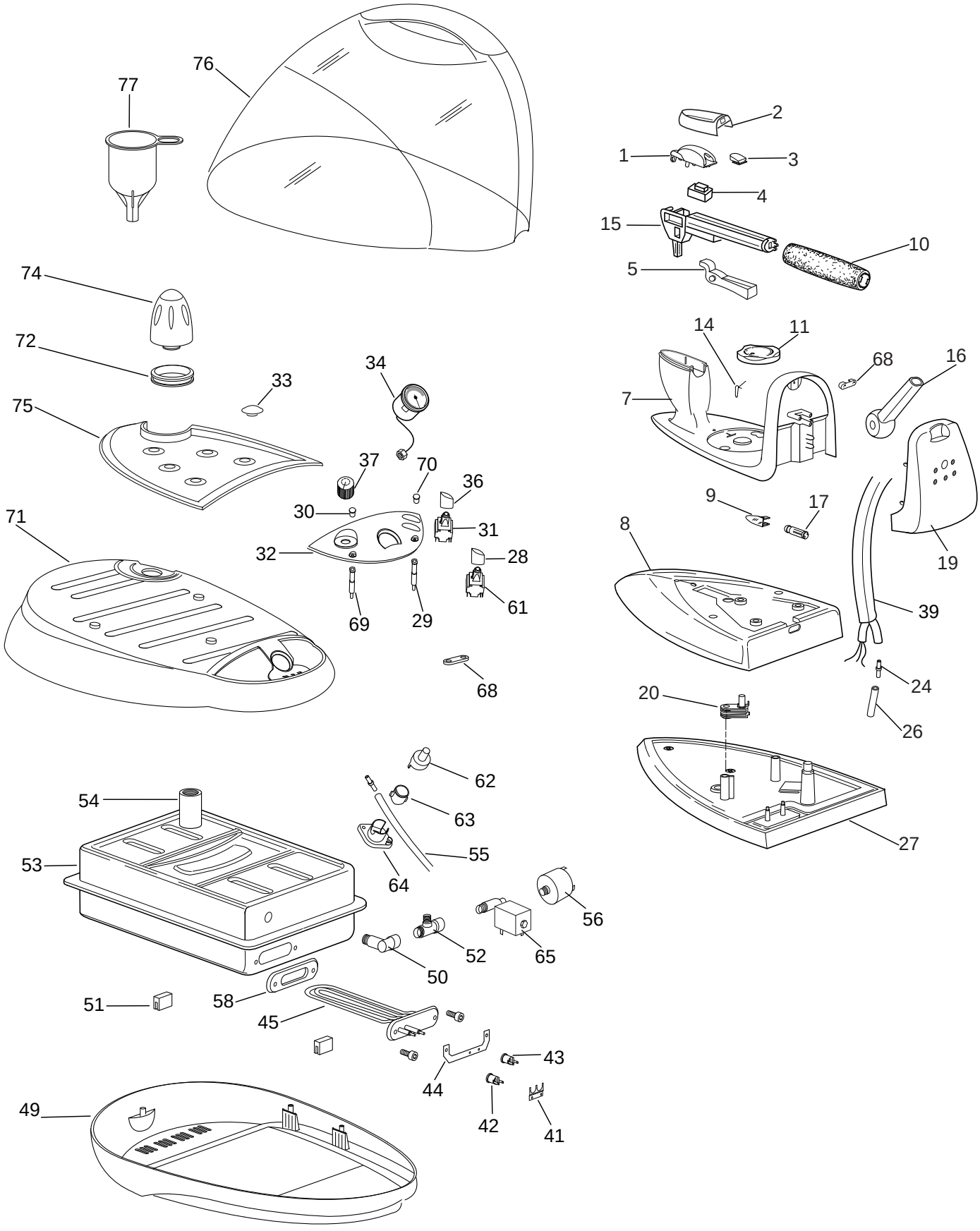

DLS SERVICE

DE'LONGHI 'INT' PRO180 Cod.0128660202

Pos	Codice	Italiano	English	Francais	Deutsch	Espanol
01	**5328110600**	TASTO	PUSH BUTTON	POUSSOIR	TASTE	TECLA
02	**5328115200**	COPRITASTO	PUSH BUTTON COVER	COUVRE POUSSOIR	TASTENABDECKUNG	CUBRETECLA
03	**5328110700**	FERMO	STOP	ARRET	SPERRUNG	TOPE
04	**VT157339**	INTERRUTTORE	SWITCH	INTERRUPTEUR	SCHALTER	INTERRUPTOR
05	**5328108900**	LEVA	LEVER	LEVIER	HEBEL	PALANCA
07	**5328114900**	SUPPORTO	SUPPORT	SUPPORT	HALTER	SOPORTE
08	**7028100700**	CALOTTA	COVER	CALOTTE	HAUBE	TAPA
09	**5328109100**	GEMMA ARANCIO	ORANGE LENS	LENTILLE ORANGE	Dunkelorange LINSE	PILOTO Anaranjado
10	**5328500400**	IMPUGNATURA	HANDLE	POIGNEE	GRIFF	EMPUÑADURA
11	**5928114900**	MANOPOLA	KNOB	BOUTON	KNOPF	MANDO
14	**VT105150**	MOLLA	SPRING	RESSORT	FEDER	MUELLE
15	**5328110800**	SUPPORTO	SUPPORT	SUPPORT	HALTER	SOPORTE
16	**5328106400**	PASSACAVO	CABLE GROMMET	PASSE CABLE	KABELDURCHGANG	AISLADOR
17	**5128102500**	LAMPADA	LAMP	LAMPE	LAMPE	LAMPARA
19	**5928111600**	COPERCHIO	COVER	COUVERCLE	DECKEL	TAPA
20	**5228103000**	TERMOSTATO	THERMOSTAT	THERMOSTAT	THERMOSTAT	TERMOSTATO
24	**SC26600022**	RACCORDO	CONNECTION	RACCORD	ANSCHLUSS	JUNTURA
26	**SC25010028**	TUBETTO	TUBE	TUBE	ROHR	TUBITO
27	**SC5754800**	PIASTRA STIR.	IRONING PLATE	SEMELLE	SOHLE	PLACA
28	**5928115900**	TASTO	PUSH BUTTON	POUSSOIR	TASTE	TECLA
29	**5128101000**	SPIA VERDE	Green Warning Light	Temoin Lum. Verte	Kontrolleuchte GRUEN	Piloto Verde
30	**SC6824830**	GEMMA VERDE	GREEN LENS	LENTILLE VERTE	GRUENE LINSE	PILOTO VERDE
31	**VT101526**	INTERRUTTORE	SWITCH	INTERRUPTEUR	SCHALTER	INTERRUPTOR
32	**5928115700**	CRUSCOTTO	CONTROL PANEL	Tableau deCommande	BEDIENUNGSBLENDE	Marco Panel Mandos
33	**5328116600**	GOMMINO	RUBBER PAD	PARE CHOCS	PUFFER	GUARNICION
34	**5228103300**	MANOMETRO	MANOMETER	MANOMETRE	DRUCKANZEIGER	MANOMETRO
36	**5928115800**	TASTO	PUSH BUTTON	POUSSOIR	TASTE	TECLA
37	**7328121200**	MANOPOLA	KNOB	BOUTON	KNOPF	MANDO
39	**5528100300**	CAVO	CABLE	CABLE	KABEL	CABLE
41	**SC6404200**	PIASTRINA	PLATE	PLAQUETTE	PLAETTCHEN	PLAQUITA
42	**VT105656**	TERMOSTATO 145°	THERMOSTAT 145°	THERMOSTAT 145°	THERMOSTAT 145°	TERMOSTATO 145°
43	**5228101500**	TERMOSTATO 160°	THERMOSTAT 160°	THERMOSTAT 160°	THERMOSTAT 160°	TERMOSTATO 160°
44	**SC29990077**	SUPPORTO	SUPPORT	SUPPORT	HALTER	SOPORTE
45	**SC39990090**	RESISTENZA	HEATING Element	ELEMENT Chauffant	HEIZELEMENT	RESISTENCIA
49	**5328114100**	SCOCCA INF.	BODY LOWER	CARROSSERIE INF.	KASTEN UNTEN	CARCASA INF.
50	**6128101400**	RACCORDO	CONNECTION	RACCORD	ANSCHLUSS	JUNTURA
51	**SC26010003**	GOMMINO	RUBBER PAD	PARE CHOCS	PUFFER	GUARNICION
52	**6128101300**	RACCORDO	CONNECTION	RACCORD	ANSCHLUSS	JUNTURA
53	**7328113900**	CALDAIA	BOILER	CHAUDIERE	HEIZKESSEL	CALDERA
54	**6128100500**	NIPPLE	NIPPLE	NIPPLE	NIPPEL	NIPLE
55	**SC5174020**	TUBETTO	TUBE	TUBE	ROHR	TUBITO
56	**5228101700**	PRESSOSTATO	PRESSURE Switch	PRESSOSTAT	DRUCKWAECHTER	PRESOSTATO
58	**SC29993057**	GUARNIZIONE	GASKET	JOINT	DICHTUNG	GUARNICION
59	**VT157332**	FILTRO RETE	NOISE FILTER	FILTRE Antiparasites	ENTSTOERFILTER	FILTRO
61	**SC1770225**	INTERRUTTORE	SWITCH	INTERRUPTEUR	SCHALTER	INTERRUPTOR
62	**SC5654780**	RUBINETTO	TAP	ROBINET	HAHN	GRIFO
63	**SC5654800**	PISTONE	PISTON	PISTON	KOLBEN	PISTON
64	**5328114400**	TAPPO	STOPPER	BOUCHON	STOEPSEL	TAPON
65	**5228103200**	ELETTROVALVOLA	SOLENOID VALVE	Soupape Electrique	SOLENOIDVENTIL	Valvula Solenoide
68	**SC29991056**	SERRACAVO	WIRE CLAMP	SERRE CABLE	KABELSCHELLE	GRAPA
69	**5128100900**	SPIA	WARNING LIGHT	TEMOIN LUMINEUX	KONTROLLEUCHTE	PILOTO
70	**SC6824840**	GEMMA ARANCIO	ORANGE LENS	LENTILLE ORANGE	Dunkelorange LINSE	PILOTO Anaranjado
71	**5328114000**	SCOCCA SUP.	BODY UPPER	CARROSSERIE sup.	KASTEN OBEN	CARCASA SUP.
72	**VT257031**	GUARNIZIONE	GASKET	JOINT	DICHTUNG	GUARNICION
74	**7328122500**	TAPPO	STOPPER	BOUCHON	STOEPSEL	TAPON
75	**7328121300**	TAPPETO	RUBBER CARPET	TAPIS	GUMMITEPPICH	Alfombra de Caucho
76	**7328122700**	COPERTURA	COVER	COUVERTURE	VERSCHLUSS	REVESTIMIENTO
77	**5328105200**	IMBUTO	FUNNEL	ENTONNOIR	TRICHTER	EMBUDO