# DE'LONGHI "INT" PRO 150

Stiromeglio Master

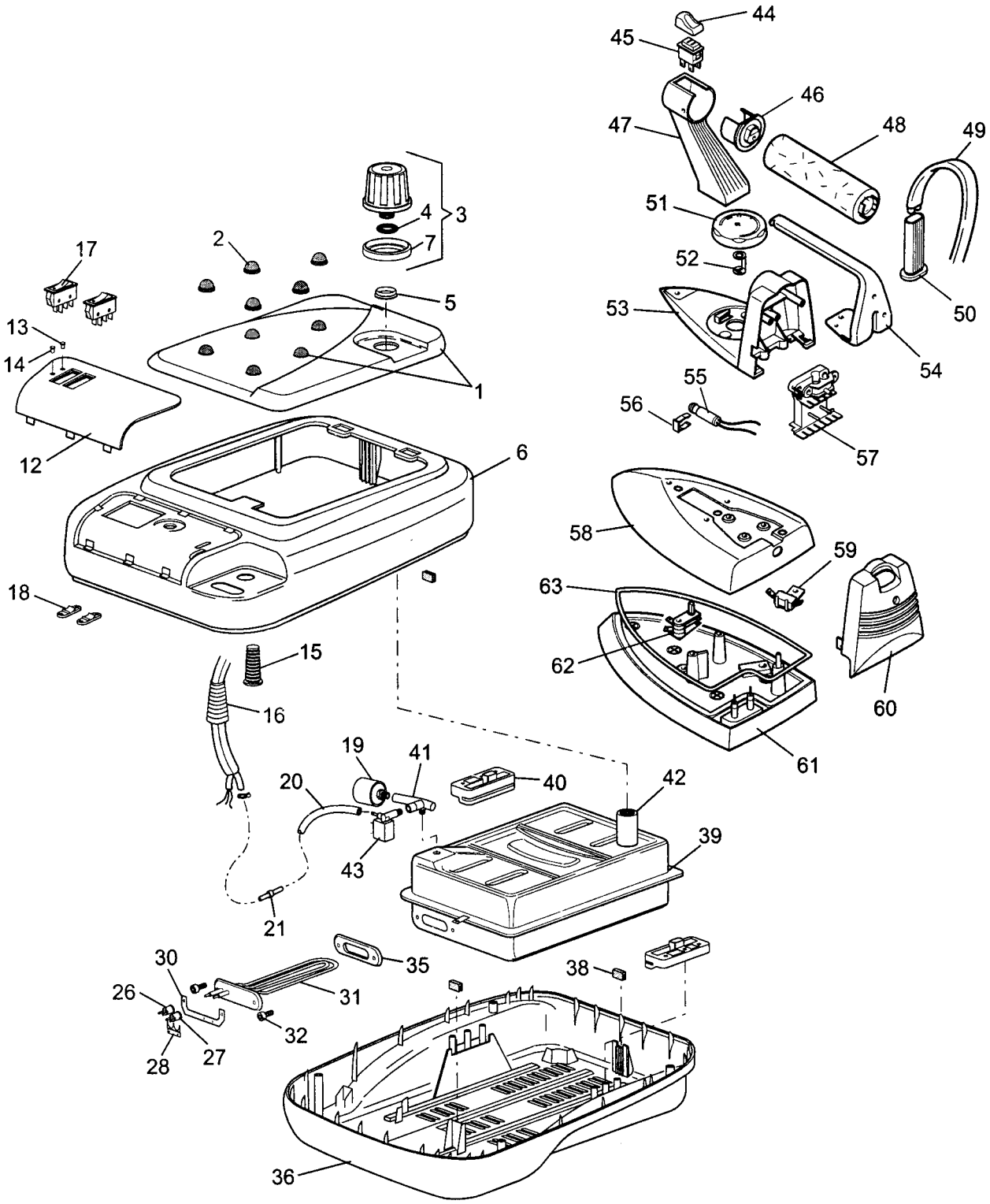

DLS SERVICE

# DE'LONGHI 'INT' PRO150 0128209800

| Pos | Codice | Italiano | English | Francais | Deutsch | Espanol |
|---|---|---|---|---|---|---|
| 01 | **VT557201** | TAPPETO | RUBBER CARPET | TAPIS | GUMMITEPPICH | Alfombra de Caucho |
| 02 | **VT535156** | PIEDINO | FOOT | PIED | FUSS | PIE |
| 03 | **SC4521700** | TAPPO | STOPPER | BOUCHON | STOEPSEL | TAPON |
| 04 | **SC5804300** | O-RING | O-RING | JOINT OR | O-RING | O-RING |
| 05 | **SC5803250** | GUARNIZIONE | GASKET | JOINT | DICHTUNG | GUARNICION |
| 06 | **VT257022** | SCOCCA SUP. | BODY UPPER | CARROSSERIE sup. | KASTEN OBEN | CARCASA SUP. |
| 07 | **SC4524380** | PROTEZIONE | PROTECTION | PROTECTION | SCHUTZ | PROTECCION |
| 12 | **VT525040** | MASCHERINA | TEMPLATE | PLAQUE | BLENDE | PLANTILLA |
| 13 | **SC6824830** | GEMMA VERDE | GREEN LENS | LENTILLE VERTE | GRUENE LINSE | PILOTO VERDE |
| 14 | **SC6824840** | GEMMA ARANCIO | ORANGE LENS | LENTILLE ORANGE | Dunkelorange LINSE | PILOTO Anaranjado |
| 15 | **SC29991333** | PASSACAVO | CABLE GROMMET | PASSE CABLE | KABELDURCHGANG | AISLADOR |
| 16 | **SC29991334** | PASSACAVO | CABLE GROMMET | PASSE CABLE | KABELDURCHGANG | AISLADOR |
| 17 | **SC1771403** | INTERRUTTORE | SWITCH | INTERRUPTEUR | SCHALTER | INTERRUPTOR |
| 18 | **SC29991056** | SERRACAVO | WIRE CLAMP | SERRE CABLE | KABELSCHELLE | GRAPA |
| 19 | **VT157324** | PRESSOSTATO | PRESSURE Switch | PRESSOSTAT | DRUCKWAECHTER | PRESOSTATO |
| 20 | **SC5174020** | TUBETTO | TUBE | TUBE | ROHR | TUBITO |
| 21 | **SC26600022** | RACCORDO | CONNECTION | RACCORD | ANSCHLUSS | JUNTURA |
| 26 | **SC1771511** | TERMOSTATO 155° | THERMOSTAT 155° | THERMOSTAT 155° | THERMOSTAT 155° | TERMOSTATO 155° |
| 27 | **SC1771529** | TERMOSTATO 145° | THERMOSTAT 145° | THERMOSTAT 145° | THERMOSTAT 145° | TERMOSTATO 145° |
| 28 | **SC6404200** | PIASTRINA | PLATE | PLAQUETTE | PLAETTCHEN | PLAQUITA |
| 30 | **SC29990077** | SUPPORTO | SUPPORT | SUPPORT | HALTER | SOPORTE |
| 31 | **SC39990090** | RESISTENZA | HEATING Element | ELEMENT Chauffant | HEIZELEMENT | RESISTENCIA |
| 32 | **SC1002824** | VITE | SCREW | VIS | SCHRAUBE | TORNILLO |
| 35 | **SC29993057** | GUARNIZIONE | GASKET | JOINT | DICHTUNG | GUARNICION |
| 36 | **VT257016** | SCOCCA INF. | BODY LOWER | CARROSSERIE INF. | KASTEN UNTEN | CARCASA INF. |
| 38 | **SC26010003** | GOMMINO | RUBBER PAD | PARE CHOCS | PUFFER | GUARNICION |
| 39 | **VT557300** | CALDAIA | BOILER | CHAUDIERE | HEIZKESSEL | CALDERA |
| 40 | **VT257303** | SUPPORTO | SUPPORT | SUPPORT | HALTER | SOPORTE |
| 41 | **VT157002** | RACCORDO | CONNECTION | RACCORD | ANSCHLUSS | JUNTURA |
| 42 | **VT157006** | PROLUNGA | EXTENSION | RALLONGE | VERLAENGERUNG | PROLONGACION |
| 43 | **VT157016** | ELETTROVALVOLA | SOLENOID VALVE | Soupape Electrique | SOLENOIDVENTIL | Valvula Solenoide |
| 44 | **VT205519** | TASTO | PUSH BUTTON | POUSSOIR | TASTE | TECLA |
| 45 | **512267** | PULSANTE | PUSH BUTTON | POUSSOIR | DRUCKKNOPF | BOTON |
| 46 | **535546** | FLANGIA | FLANGE | BRIDE | FLANSCH | BRIDA |
| 47 | **535948** | FRONTALE | FRONT PANEL | PANNEAU AVANT | VORDERWAND | PARTE DELANTERA |
| 48 | **VT505526** | IMPUGNATURA | HANDLE | POIGNEE | GRIFF | EMPUÑADURA |
| 49 | **VT157406** | TUBO | TUBE | TUBE | ROHR | TUBO |
| 50 | **534626** | PASSACAVO | CABLE GROMMET | PASSE CABLE | KABELDURCHGANG | AISLADOR |
| 51 | **VT525526** | MANOPOLA | KNOB | BOUTON | KNOPF | MANDO |
| 52 | **690057** | GIUNTO | JOINT | JOINT | KUPPLUNG | JUNTA |
| 53 | **VT505537** | SCOCCA | BODY | CARROSSERIE | KASTEN | CARCASA |
| 54 | **707140** | STAFFA | BRACKET | ETRIER | BUEGEL | ABRAZADERA |
| 55 | **512264** | SPIA | WARNING LIGHT | TEMOIN LUMINEUX | KONTROLLEUCHTE | PILOTO |
| 56 | **536665** | GEMMA GIALLA | YELLOW LENS | LENTILLE JAUNE | LINSE GELB | PILOTO AMARILLO |
| 57 | **534597** | SUPPORTO | SUPPORT | SUPPORT | HALTER | SOPORTE |
| 58 | **707139** | CALOTTA | COVER | CALOTTE | HAUBE | TAPA |
| 59 | **512299** | TERMOSTATO 315° | THERMOSTAT 315° | THERMOSTAT 315° | THERMOSTAT 315° | TERMOSTATO 315° |
| 60 | **VT525527** | FONDO | BOTTOM | FOND | BODEN | FONDO |
| 61 | **VT505969** | PIASTRA | PLATE | PLAQUE | PLATTE | PLACA |
| 62 | **512298** | TERMOSTATO | THERMOSTAT | THERMOSTAT | THERMOSTAT | TERMOSTATO |
| 63 | **534631** | GUARNIZIONE | GASKET | JOINT | DICHTUNG | GUARNICION |