0128670101

DE'LONGHI "INT" PRO130
STIROMEGLIO COMPACT

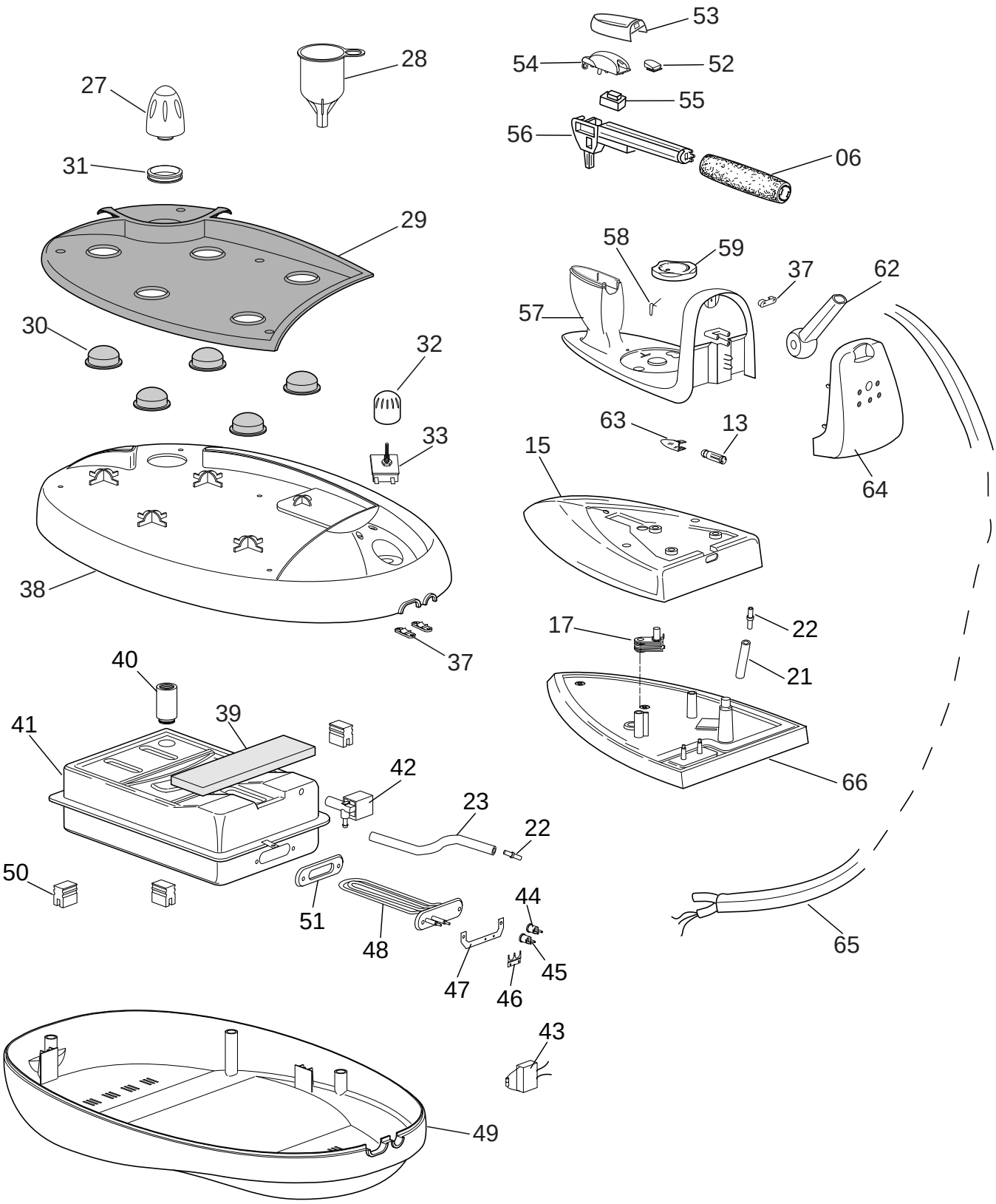

DLS SERVICE

DE'LONGHI 'INT' PRO130 Cod.0128670101

Pos	Codice	Italiano	English	Francais	Deutsch	Espanol
06	**VT505526**	IMPUGNATURA	HANDLE	POIGNEE	GRIFF	EMPUÑADURA
13	**5128102500**	LAMPADA	LAMP	LAMPE	LAMPE	LAMPARA
15	**7028100700**	CALOTTA	COVER	CALOTTE	HAUBE	TAPA
17	**5228103000**	TERMOSTATO	THERMOSTAT	THERMOSTAT	THERMOSTAT	TERMOSTATO
21	**SC25010028**	TUBETTO	TUBE	TUBE	ROHR	TUBITO
22	**SC26600022**	RACCORDO	CONNECTION	RACCORD	ANSCHLUSS	JUNTURA
23	**5328500600**	TUBETTO	TUBE	TUBE	ROHR	TUBITO
27	**7328122200**	TAPPO	STOPPER	BOUCHON	STOEPSEL	TAPON
28	**5328105200**	IMBUTO	FUNNEL	ENTONNOIR	TRICHTER	EMBUDO
29	**5328115800**	TAPPETO	RUBBER CARPET	TAPIS	GUMMITEPPICH	Alfombra de Caucho
30	**5328117200**	GOMMINO	RUBBER PAD	PARE CHOCS	PUFFER	GUARNICION
31	**SC5803250**	GUARNIZIONE	GASKET	JOINT	DICHTUNG	GUARNICION
32	**7328122400**	MANOPOLA	KNOB	BOUTON	KNOPF	MANDO
33	**5128103300**	COMMUTATORE	Change Over Switch	COMMUTATEUR	UMSCHALTER	CONMUTADOR
37	**SC29991056**	SERRACAVO	WIRE CLAMP	SERRE CABLE	KABELSCHELLE	GRAPA
38	**5928116300**	SCOCCA SUP.	BODY UPPER	CARROSSERIE sup.	KASTEN OBEN	CARCASA SUP.
39	**VT128347**	ISOLANTE	INSULATOR	ISOLANT	ISOLIERSTOFF	AISLANTE
40	**6128100300**	NIPPLE	NIPPLE	NIPPLE	NIPPEL	NIPLE
41	**7328112700**	CALDAIA	BOILER	CHAUDIERE	HEIZKESSEL	CALDERA
42	**VT105671**	ELETTROVALVOLA	SOLENOID VALVE	Soupape Electrique	SOLENOIDVENTIL	Valvula Solenoide
43	**VT157332**	FILTRO RETE	NOISE FILTER	FILTRE Antiparasites	ENTSTOERFILTER	FILTRO
44	**5228101600**	TERMOSTATO 160°	THERMOSTAT 160°	THERMOSTAT 160°	THERMOSTAT 160°	TERMOSTATO 160°
45	**5228102000**	TERMOSTATO 125°	THERMOSTAT 125°	THERMOSTAT 125°	THERMOSTAT 125°	TERMOSTATO 125°
46	**SC6404200**	PIASTRINA	PLATE	PLAQUETTE	PLAETTCHEN	PLAQUITA
47	**SC29990077**	SUPPORTO	SUPPORT	SUPPORT	HALTER	SOPORTE
48	**SC39990090**	RESISTENZA	HEATING Element	ELEMENT Chauffant	HEIZELEMENT	RESISTENCIA
49	**5328115700**	SCOCCA INF.	BODY LOWER	CARROSSERIE INF.	KASTEN UNTEN	CARCASA INF.
50	**5328117500**	DISTANZIALE	SPACER	ENTRETOISE	DISTANZSTUECK	DISTANCIADOR
51	**SC29993057**	GUARNIZIONE	GASKET	JOINT	DICHTUNG	GUARNICION
52	**5328110700**	FERMO	STOP	ARRET	SPERRUNG	TOPE
53	**5328115200**	COPRITASTO	PUSH BUTTON COVER	COUVRE POUSSOIR	TASTENABDECKUNG	CUBRETECLA
54	**5328110600**	TASTO	PUSH BUTTON	POUSSOIR	TASTE	TECLA
55	**VT157339**	INTERRUTTORE	SWITCH	INTERRUPTEUR	SCHALTER	INTERRUPTOR
56	**5328111000**	SUPPORTO	SUPPORT	SUPPORT	HALTER	SOPORTE
57	**5328114900**	SUPPORTO	SUPPORT	SUPPORT	HALTER	SOPORTE
58	**VT105150**	MOLLA	SPRING	RESSORT	FEDER	MUELLE
59	**5928114900**	MANOPOLA	KNOB	BOUTON	KNOPF	MANDO
62	**5328106400**	PASSACAVO	CABLE GROMMET	PASSE CABLE	KABELDURCHGANG	AISLADOR
63	**5328109100**	GEMMA ARANCIO	ORANGE LENS	LENTILLE ORANGE	Dunkelorange LINSE	PILOTO Anaranjado
64	**5928111600**	COPERCHIO	COVER	COUVERCLE	DECKEL	TAPA
65	**5528100700**	CAVO	CABLE	CABLE	KABEL	CABLE
66	**7328115800**	PIASTRA	PLATE	PLAQUE	PLATTE	PLACA