DE'LONGHI "EU" O191

ANNULLA E SOSTITUISCE IL CORRISPONDENTE ESPLOSO IN VS. POSSESSO

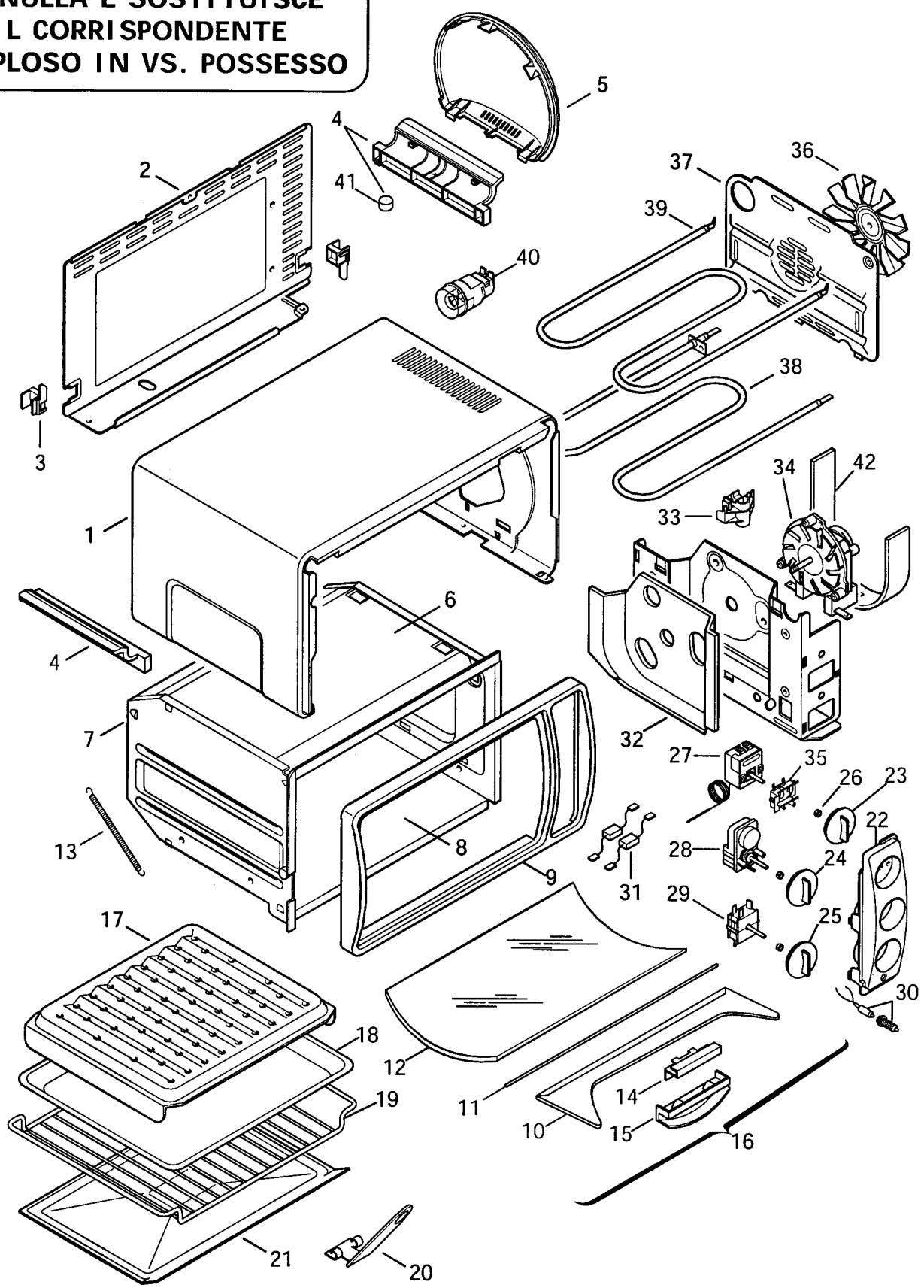

DLS SERVICE

DE'LONGHI 'EU' O191 Cod. 0118980011

Pos	Codice	Italiano	English	Francais	Deutsch	Espanol
01	**7018104700**	INVOLUCRO	CASING	ENVELOPPE	GEHAEUSE	ENVOLTURA
02	**690532**	SCHIENALE	REAR PANEL	PANNEAU ARRIERE	RUECKWAND	RESPALDO
03	**531646**	DISTANZIALE	SPACER	ENTRETOISE	DISTANZSTUECK	DISTANCIADOR
04	**551895**	PIEDINO	FOOT	PIED	FUSS	PIE
05	**535529**	CHIUSURA	CLOSURE	FERMETURE	VERSCHLUSS	CIERRE
06	**690088**	SEPARATORE	SEPARATOR	SEPARATEUR	TRENNER	SEPARADOR
07	**7318114400**	CAVITA	CAVITY	CAVITE	HOHLRAUM	CAVIDAD
08	**690085**	FONDO	BOTTOM	FOND	BODEN	FONDO
09	**7018102000**	CORNICE	FRAME	ENCADREMENT	RAHMEN	MARCO
10	**7118100100**	SUPPORTO	SUPPORT	SUPPORT	HALTER	SOPORTE
11	**6118100000**	ASTA	ROD	TIGE	STANGE	BARRA
12	**5318101000**	VETRO	GLASS	VERRE	GLAS	VIDRIO
13	**611228**	MOLLA	SPRING	RESSORT	FEDER	MUELLE
14	**7018103500**	SQUADRETTA	BRACKET	EQUERRE	WINKEL	ESCUADRA
15	**533426**	MANIGLIA	HANDLE	POIGNEE	GRIFF	MANILLA
16	**7318114800**	PORTA	DOOR	PORTE	TUER	PUERTA
17	**690305**	LECCARDA	DRIP PAN	LECHEFRITE	FETTPFANNE	GRASERA
18	**709304**	PIATTO	PLATE	PLAT	TELLER	PLATO
19	**611229**	GRIGLIA COTT.	WIRE RACK	GRILLE	ROST	PARRILLA
20	**702399**	IMPUGNATURA	HANDLE	POIGNEE	GRIFF	EMPUÑADURA
21	**702290**	CASSETTO	DRAWER	TIROIR	SCHUBFACH	CAJON
22	**5918106300**	CRUSCOTTO	CONTROL PANEL	Tableau deCommande	BEDIENUNGSBLENDE	Marco Panel Mandos
23	**5518103400**	MANOPOLA	KNOB	BOUTON	KNOPF	MANDO
24	**5518103300**	MANOPOLA DKS/ITALORA	KNOB DKS/ITALORA	BOUTON DKS/ITALORA	KNOPF DKS/ITALORA	MANDO DKS/ITALORA
25	**5518103200**	MANOPOLA	KNOB	BOUTON	KNOPF	MANDO
26	**602650**	ANELLO	RING	ANNEAU	RING	ANILLO
27	**521454**	TERMOSTATO	THERMOSTAT	THERMOSTAT	THERMOSTAT	TERMOSTATO
28	**521468**	TIMER ITALORA	TIMER ITALORA	PROGRAMMATEUR ITALORA	TIMER ITALORA	TIMER ITALORA
28	**521691**	TIMER DKS	TIMER DKS	MINUTERIE DKS	TIMER DKS	TIMER DKS
29	**521453**	COMMUTATORE	Change Over Switch	COMMUTATEUR	UMSCHALTER	CONMUTADOR
30	**5118100800**	SPIA	WARNING LIGHT	TEMOIN LUMINEUX	KONTROLLEUCHTE	PILOTO
31	**5118100500**	DIODO	DIODE	DIODE	DIODE	DIODO
32	**5318109700**	ISOLANTE	INSULATOR	ISOLANT	ISOLIERSTOFF	AISLANTE
33	**732303**	SERRACAVO	WIRE CLAMP	SERRE CABLE	KABELSCHELLE	GRAPA
34	**512648**	MOTORE	MOTOR	MOTEUR	MOTOR	MOTOR
35	**5318108000**	SUPPORTO	SUPPORT	SUPPORT	HALTER	SOPORTE
36	**607702**	VENTOLA	FAN	HELICE	FLUEGELRAD	VENTILADOR
37	**7018101500**	FIANCO	SIDE	COTE	SEITE	LADO
38	**512560**	RESISTENZA INF.	Heating Element Low	Element Chauffant Inf.	HEIZELEMENT UNTEN	RESISTENCIA INF.
39	**512559**	RESISTENZA SUP.	Heating Element Up	Element Chauf. Sup.	HEIZELEMENT OBEN	RESISTENCIA SUP.
40	**511432**	PORTALAMPADA	LAMP HOLDER	DOUILLE	LAMPENSOCKEL	PORTALAMPARAS
41	**531847**	GOMMINO	RUBBER PAD	PARE CHOCS	PUFFER	GUARNICION