DE'LONGHI "EU" O155

ANNULLA E SOSTITUISCE IL CORRISPONDENTE ESPLOSO IN VS. POSSESSO

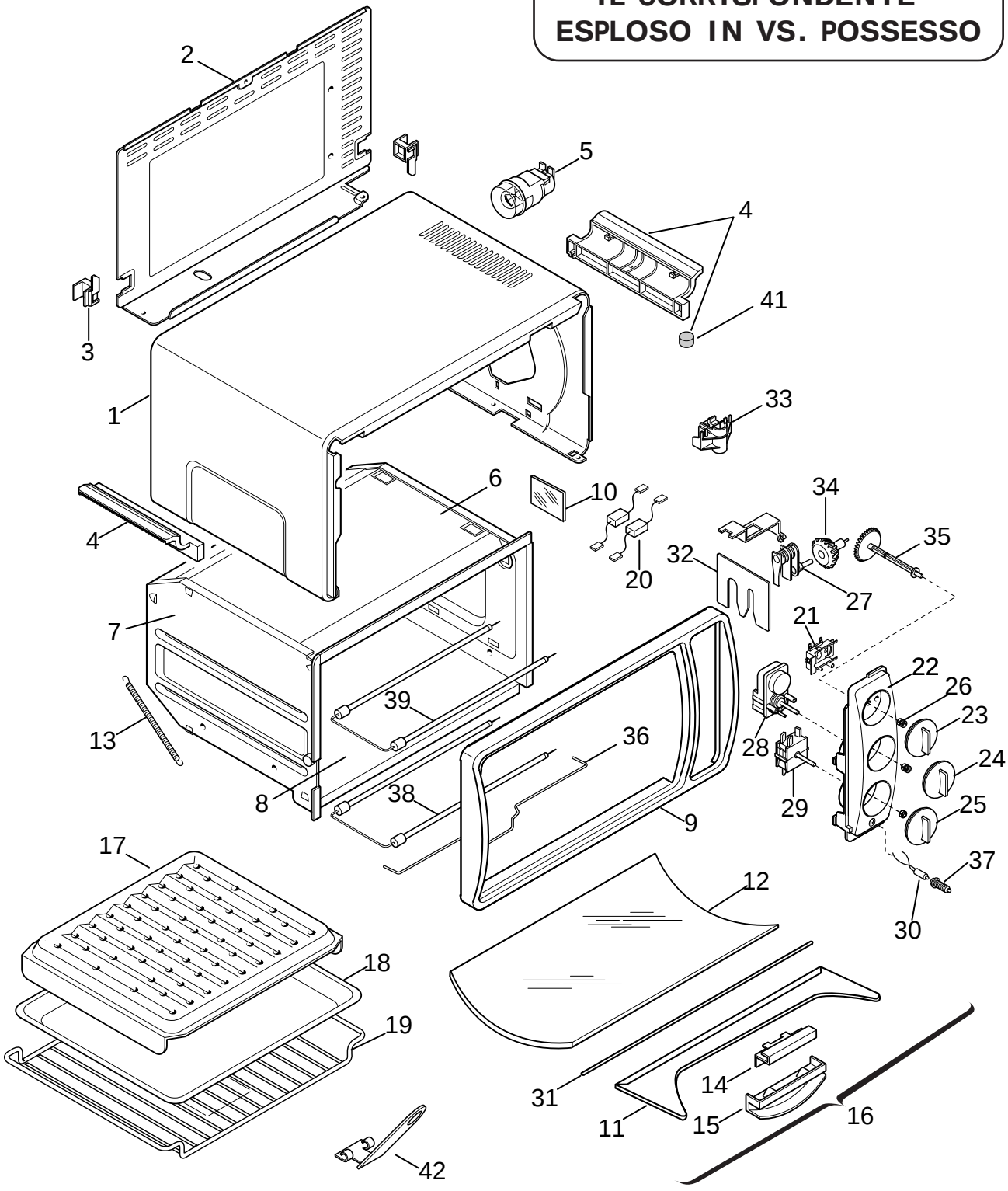

DLS SERVICE

DE’LONGHI ’EU’ O155 Cod.0118963014

Pos	Codice	Italiano	English	Francais	Deutsch	Espanol
01	**7018104500**	MANTELLO	HOUSING	ENVELOPPE	GEH¨USE	CHASIS ENVOLVENTE
02	**690532**	SCHIENALE	REAR PANEL	PANNEAU ARRIERE	RÜCKWAND	RESPALDO
03	**531646**	DISTANZIALE	SPACER	ENTRETOISE	DISTANZSTÜCK	DISTANCIADOR
04	**551895**	PIEDINO	FOOT	PIED	FUSS	PIE
05	**513133**	LAMPADA	LAMP	LAMPE	LAMPE	LAMPARA
06	**690088**	SEPARATORE	SEPARATOR	SEPARATEUR	TRENNER	SEPARADOR
07	**7318114000**	CAVITA	CAVITY	CAVITE	HOHLRAUM	CAVIDAD
08	**690515**	SPORTELLO	DOOR	PORTE	KLAPPE	PUERTA
09	**7018102000**	CORNICE	FRAME	ENCADREMENT	RAHMEN	MARCO
10	**537384**	VETRINO	GLASS	VERRE	GLAS	VIDRIO
11	**7118100000**	SUPPORTO	SUPPORT	SUPPORT	HALTER	SOPORTE
12	**5318101000**	VETRO	GLASS	VERRE	GLAS	VIDRIO
13	**611228**	MOLLA	SPRING	RESSORT	FEDER	MUELLE
14	**7018103500**	SQUADRETTA	BRACKET	EQUERRE	WINKEL	ESCUADRA
15	**533426**	MANIGLIA	HANDLE	POIGNEE	GRIFF	MANILLA
16	**7318126700**	PORTA	DOOR	PORTE	TÜR	PUERTA
17	**690305**	LECCARDA	DRIP PAN	LECHEFRITE	FETTPFANNE	GRASERA
18	**709303**	PIATTO	PLATE	PLAT	TELLER	PLATO
19	**611229**	GRIGLIA COTT.	WIRE RACK	GRILLE	ROST	PARRILLA
20	**5118100500**	DIODO	DIODE	DIODE	DIODE	DIODO
21	**5318108000**	SUPPORTO	SUPPORT	SUPPORT	HALTER	SOPORTE
22	**5918106300**	CRUSCOTTO	CONTROL PANEL	Tableau deCommande	BEDIENUNGSBLENDE	Marco Panel Mandos
23	**5518105200**	MANOPOLA	KNOB	BOUTON	KNOPF	MANDO
24	**5518105400**	MANOPOLA	KNOB	BOUTON	KNOPF	MANDO
25	**5518105300**	MANOPOLA	KNOB	BOUTON	KNOPF	MANDO
26	**602650**	ANELLO	RING	ANNEAU	RING	ANILLO
27	**521073**	TERMOSTATO	THERMOSTAT	THERMOSTAT	THERMOSTAT	TERMOSTATO
28	**521468**	TIMER ITALORA	TIMER ITALORA	PROGRAMMATEUR ITALORA	TIMER ITALORA	TIMER ITALORA
28	**521691**	TIMER DKS	TIMER DKS	MINUTERIE DKS	TIMER DKS	TIMER DKS
29	**521502**	COMMUTATORE	Change Over Switch	COMMUTATEUR	UMSCHALTER	CONMUTADOR
30	**513116**	SPIA	WARNING LIGHT	TEMOIN LUMINEUX	KONTROLLEUCHTE	PILOTO
31	**6118100000**	ASTA	ROD	TIGE	STANGE	BARRA
32	**531693**	PROTEZIONE	PROTECTION	PROTECTION	SCHUTZ	PROTECCION
33	**732303**	SERRACAVO	WIRE CLAMP	SERRE CABLE	KABELSCHELLE	GRAPA
34	**5318102700**	INGRANAGGIO	GEAR	ENGRENAGE	GETRIEBE	ENGRANAJE
35	**531664**	PROLUNGA	EXTENSION	RALLONGE	VERL¨NGERUNG	PROLONGACION
36	**611792**	MOLLA	SPRING	RESSORT	FEDER	MUELLE
37	**537332**	GEMMA	LENS	LENTILLE	LINSE	PILOTO
38	**512560**	RESISTENZA INF.	Heating Element Low	Element Chauffant Inf.	HEIZELEMENT UNTEN	RESISTENCIA INF.
39	**512559**	RESISTENZA SUP.	Heating Element Up	Element Chauf. Sup.	HEIZELEMENT OBEN	RESISTENCIA SUP.
41	**531847**	GOMMINO	RUBBER PAD	PARE CHOCS	PUFFER	GUARNICION
42	**702399**	IMPUGNATURA	HANDLE	POIGNEE	GRIFF	EMPUÑADURA