## DE'LONGHI "INT" MW 533

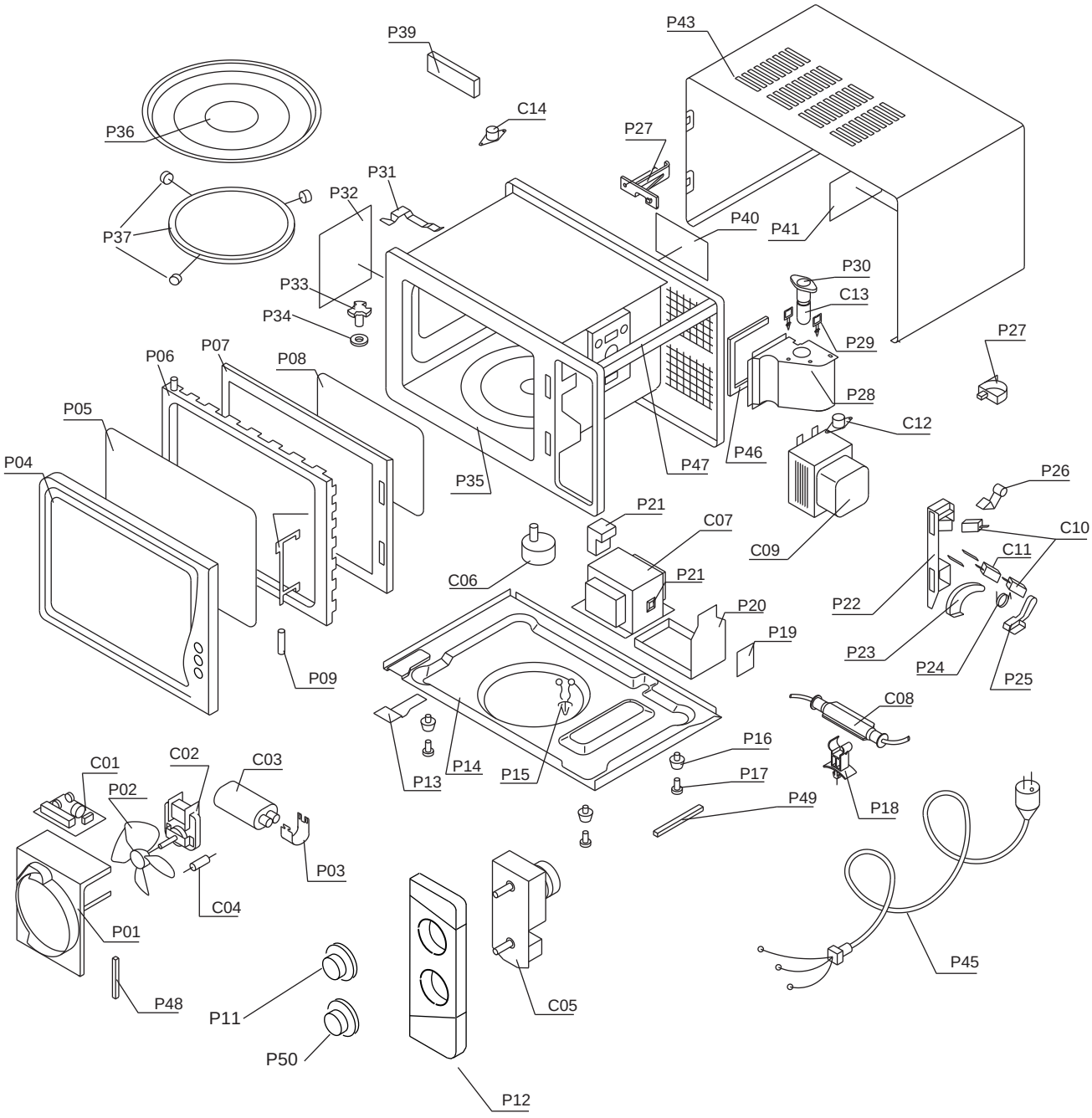

DLS SERVICE

# DE'LONGHI 'INT' MW533 Cod.0119406900

| Pos | Codice | Italiano | English | Francais | Deutsch | Espanol |
|---|---|---|---|---|---|---|
| C01 | **GA1048** | FILTRO | FILTER | FILTRE | FILTER | FILTRO |
| C02 | **GA1049** | MOTORE | MOTOR | MOTEUR | MOTOR | MOTOR |
| C03 | **GA1050** | CONDENSATORE | CONDENSER | CONDENSEUR | VERFLUESSIGER | CONDENSADOR |
| C04 | **GA1051** | DIODO | DIODE | DIODE | DIODE | DIODO |
| C05 | **GA1052** | TIMER | TIMER | PROGRAMMATEUR | ZEITSCHALTUHR | TIMER |
| C06 | **GA1053** | MOTORE | MOTOR | MOTEUR | MOTOR | MOTOR |
| C07 | **GA1054** | TRASFORMATORE | TRANSFORMER | TRANSFORMATEUR | TRANSFORMATOR | TRANSFORMADOR |
| C08 | **GA1055** | FUSIBILE | FUSE | FUSIBLE | SCHMELZSICHERUNG | FUSIBLE |
| C09 | **GA1056** | MAGNETRON | MAGNETRON | MAGNETRON | MAGNETRON | MAGNETRON |
| C10 | **GA1057** | MICROINTERRUTTORE | MICROSWITCH | MICRORUPTEUR | MIKROSCHALTER | MICROINTERRUPTOR |
| C11 | **GA1058** | MICROINTERRUTTORE | MICROSWITCH | MICRORUPTEUR | MIKROSCHALTER | MICROINTERRUPTOR |
| C12 | **GA1059** | TERMOSTATO | THERMOSTAT | THERMOSTAT | THERMOSTAT | TERMOSTATO |
| C13 | **GA1060** | LAMPADA | LAMP | LAMPE | LAMPE | LAMPARA |
| C14 | **GA1061** | TERMOSTATO | THERMOSTAT | THERMOSTAT | THERMOSTAT | TERMOSTATO |
| P01 | **GA1000** | COCLEA | ARCHIMEDES SCREW | VIS D'ARCHIMEDE | SCHNECKE | TORNILLO SIN FIN |
| P02 | **GA1001** | VENTOLA | FAN | HELICE | FLUEGELRAD | VENTILADOR |
| P03 | **GA1002** | SUPPORTO | SUPPORT | SUPPORT | HALTER | SOPORTE |
| P04 | **GA1003** | CORNICE | FRAME | ENCADREMENT | RAHMEN | MARCO |
| P05 | **GA1004** | VETRO | GLASS | VERRE | GLAS | VIDRIO |
| P06 | **GA1005** | PORTA | DOOR | PORTE | TUER | PUERTA |
| P07 | **GA1006** | COPERTURA | COVER | COUVERTURE | VERSCHLUSS | REVESTIMIENTO |
| P08 | **GA1007** | ISOLANTE | INSULATOR | ISOLANT | ISOLIERSTOFF | AISLANTE |
| P09 | **GA1008** | BOCCOLA | BUSH | BOUCLE | BUCHSE | CASQUILLO |
| P10 | **GA1009** | GANCIO | HOOK | CROCHET | HAKEN | GANCHO |
| P11 | **GA1010** | MANOPOLA | KNOB | BOUTON | KNOPF | MANDO |
| P12 | **GA1011** | CRUSCOTTO | CONTROL PANEL | Tableau deCommande | BEDIENUNGSBLENDE | Marco Panel Mandos |
| P13 | **GA1012** | CERNIERA INF. | HINGE LOWER | CHARNIERE INF. | SCHARNIER (UNTEN) | BISAGRA INF. |
| P14 | **GA1013** | PIATTO | PLATE | PLAT | TELLER | PLATO |
| P15 | **GA1014** | FERMACAVO | WIRE CLAMP | SERRE CABLE | KABELBEFESTIGUNGSHUELSE | SUJETACABLE |
| P16 | **GA1015** | PIEDINO | FOOT | PIED | FUSS | PIE |
| P17 | **GA1016** | GOMMINO | RUBBER PAD | PARE CHOCS | PUFFER | GUARNICION |
| P18 | **GA1017** | SUPPORTO | SUPPORT | SUPPORT | HALTER | SOPORTE |
| P19 | **GA1018** | ISOLANTE | INSULATOR | ISOLANT | ISOLIERSTOFF | AISLANTE |
| P20 | **GA1019** | SUPPORTO | SUPPORT | SUPPORT | HALTER | SOPORTE |
| P21 | **GA1020** | GOMMINO | RUBBER PAD | PARE CHOCS | PUFFER | GUARNICION |
| P22 | **GA1021** | SUPPORTO | SUPPORT | SUPPORT | HALTER | SOPORTE |
| P23 | **GA1022** | CAMMA | CAM | CAME | NOCKE | LEVA |
| P24 | **GA1023** | MOLLA | SPRING | RESSORT | FEDER | MUELLE |
| P25 | **GA1024** | LEVA | LEVER | LEVIER | HEBEL | PALANCA |
| P26 | **GA1025** | LEVA | LEVER | LEVIER | HEBEL | PALANCA |
| P27 | **GA1026** | SUPPORTO | SUPPORT | SUPPORT | HALTER | SOPORTE |
| P28 | **GA1027** | CONVOGLIATORE | DUCT | CONVOYEUR | ABDECKUNG | TRANSPORTADOR |
| P29 | **GA1028** | FERMACAVO | WIRE CLAMP | SERRE CABLE | KABELBEFESTIGUNGSHUELSE | SUJETACABLE |
| P30 | **GA1029** | PRESA | SOCKET | PRISE | STECKDOSE | TOMA |
| P31 | **GA1030** | CERNIERA SUP. | HINGE UPPER | CHARNIERE SUP. | SCHARNIER (OBEN) | BISAGRA SUP. |
| P32 | **GA1031** | COPERCHIO | COVER | COUVERCLE | DECKEL | TAPA |
| P33 | **GA1032** | TRASCINATORE | PULLER | ENTRAINEUR | MITNEHMER | ARRASTRADOR |
| P34 | **GA1033** | RONDELLA | WASHER | RONDELLE | SCHEIBE | RONDANA |
| P35 | **GA1034** | CAVITA | CAVITY | CAVITE | HOHLRAUM | CAVIDAD |
| P36 | **GA1035** | PIATTO | PLATE | PLAT | TELLER | PLATO |
| P37 | **GA1036** | SUPPORTO | SUPPORT | SUPPORT | HALTER | SOPORTE |
| P39 | **GA1037** | SPUGNETTA | SPONGE | EPONGE | SCHWAMM | ESPONJA |
| P40 | **GA1038** | ISOLANTE | INSULATOR | ISOLANT | ISOLIERSTOFF | AISLANTE |
| P41 | **GA1039** | ISOLANTE | INSULATOR | ISOLANT | ISOLIERSTOFF | AISLANTE |
| P42 | **GA1040** | ISOLANTE | INSULATOR | ISOLANT | ISOLIERSTOFF | AISLANTE |
| P43 | **GA1041** | COPERTURA | COVER | COUVERTURE | VERSCHLUSS | REVESTIMIENTO |
| P45 | **GA1042** | CAVO ALIMENTAZIONE | POWER SUPPLY CORD | CORDON D'ALIMENTATION | NETZKABEL | CABLE ALIMENTACION |
| P46 | **GA1043** | SPUGNETTA | SPONGE | EPONGE | SCHWAMM | ESPONJA |
| P47 | **GA1044** | STAFFA | BRACKET | ETRIER | BUEGEL | ABRAZADERA |
| P48 | **GA1045** | SPUGNETTA | SPONGE | EPONGE | SCHWAMM | ESPONJA |
| P49 | **GA1046** | SPUGNETTA | SPONGE | EPONGE | SCHWAMM | ESPONJA |
| P50 | **GA1047** | MANOPOLA | KNOB | BOUTON | KNOPF | MANDO |