DēLonghi

SERVICE

0119011700

DE'LONGHI "EU1 " MW401

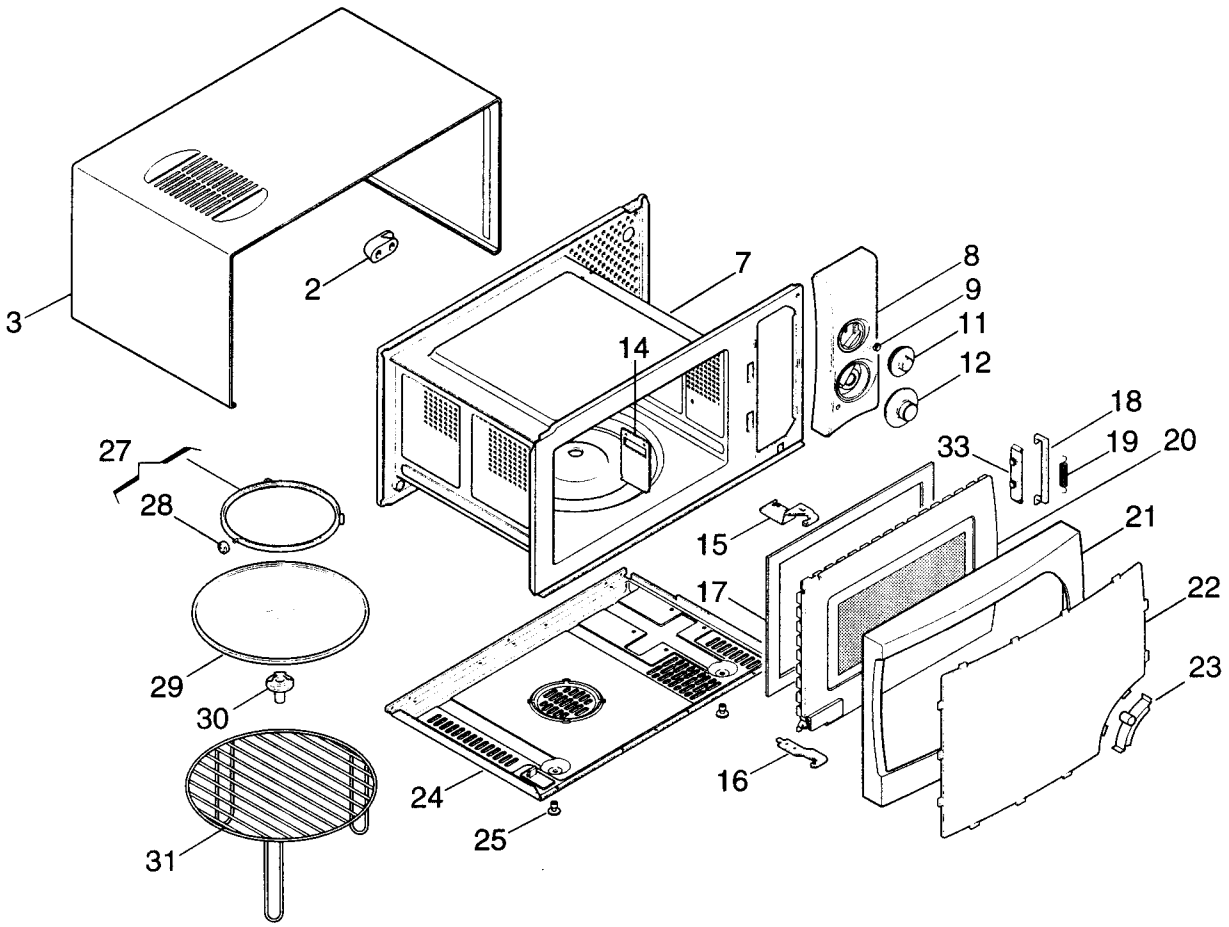

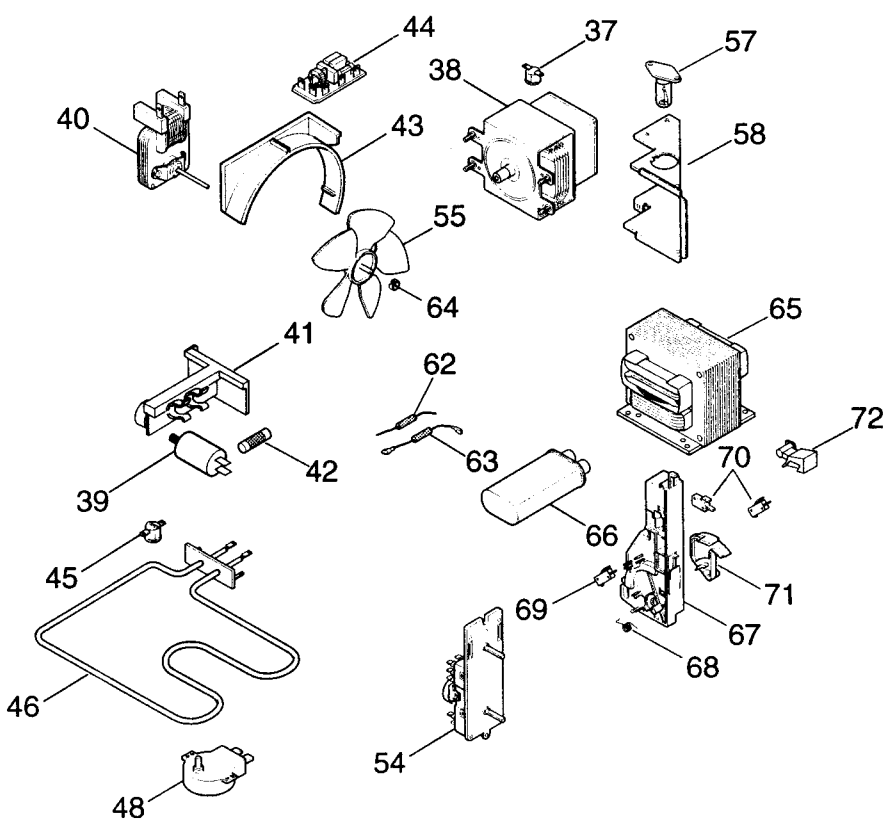

DLS SERVICE

DE'LONGHI 'EU' MW401 0119011700

Pos	Codice	Italiano	English	Francais	Deutsch	Espanol
	560088	POLISTIROLO SUP.	POLYSTYRENE UPPER	POLYSTYRENE SUP.	STYROPOR OBEN	POLIESTIROL SUP.
	560089	POLISTIROLO INF.	POLYSTYRENE LOWER	POLYSTYRENE INF.	STYROPOR UNTEN	POLIESTIROL INF.
	560138	SCATOLA IMBALLO	CARTON PACKAGING	CARTON D'EMBALLAGE	VERPACKUNGSKARTON	CAJA EMBALAJE
	573784	ISTRUZIONI (IGBFDNLE)	INSTRUCTION BOOK	MODE D'EMPLOI	BEDIENUNGSANLEITUNG	ISTRUCCION
	573798	ISTRUZION(GBPGRHSU)	INSTRUCTION BOOK	MODE D'EMPLOI	BEDIENUNGSANLEITUNG	ISTRUCCION
02	**534075**	DISTANZIALE	SPACER	ENTRETOISE	DISTANZSTUECK	DISTANCIADOR
03	**709311**	MANTELLO	HOUSING	ENVELOPPE	GEHAEUSE	CHASIS ENVOLVENTE
07	**709194**	CAVITA	CAVITY	CAVITE	HOHLRAUM	CAVIDAD
08	**593089**	CRUSCOTTO	CONTROL PANEL	Tableau de Commande	BEDIENUNGSBLENDE	Marco Panel Mandos
09	**611900**	MOLLA	SPRING	RESSORT	FEDER	MUELLE
11	**593097**	MANOPOLA	KNOB	BOUTON	KNOPF	MANDO
12	**592976**	MANOPOLA	KNOB	BOUTON	KNOPF	MANDO
14	**536796**	CHIUSURA	CLOSURE	FERMETURE	VERSCHLUSS	CIERRE
15	**709183**	CERNIERA SUP.	HINGE UPPER	CHARNIERE SUP.	SCHARNIER (OBEN)	BISAGRA SUP.
16	**709162**	CERNIERA INF.	HINGE LOWER	CHARNIERE INF.	SCHARNIER (UNTEN)	BISAGRA INF.
17	**536675**	CORNICE	FRAME	ENCADREMENT	RAHMEN	MARCO
18	**536384**	GANCIO	HOOK	CROCHET	HAKEN	GANCHO
19	**612003**	MOLLA	SPRING	RESSORT	FEDER	MUELLE
20	**738228**	PORTA	DOOR	PORTE	TUER	PUERTA
21	**536867**	CORNICE	FRAME	ENCADREMENT	RAHMEN	MARCO
22	**593092**	FRONTALE	FRONT PANEL	PANNEAU AVANT	VORDERWAND	PARTE DELANTERA
23	**536869**	MANIGLIA	HANDLE	POIGNEE	GRIFF	MANILLA
24	**690512**	BASAMENTO	BASE	SOCLE	UNTERGESTELL	BASE
25	**532710**	GOMMINO	RUBBER PAD	PARE CHOCS	PUFFER	GUARNICION
27	**552584**	SUPPORTO	SUPPORT	SUPPORT	HALTER	SOPORTE
28	**536792**	RUOTA	CASTOR	ROULETTE	RAD	RUEDA
29	**536793**	PIATTO	PLATE	PLAT	TELLER	PLATO
30	**536775**	TRASCINATORE	PULLER	ENTRAINEUR	MITNEHMER	ARRASTRADOR
31	**612016**	GRIGLIA	GRID	GRILLE	GITTER	PARRILLA
33	**536347**	GUIDA	RUNNER	GLISSIERE	FUEHRUNG	GUIA
37	**521466**	TERMOSTATO	THERMOSTAT	THERMOSTAT	THERMOSTAT	TERMOSTATO
38	**512985**	MAGNETRON	MAGNETRON	MAGNETRON	MAGNETRON	MAGNETRON
39	**512630**	FILTRO	FILTER	FILTRE	FILTER	FILTRO
40	**512961**	MOTORE JOHNSON	MOTOR JOHNSON	MOTEUR JOHNSON	MOTOR JOHNSON	MOTOR JOHNSON
41	**536687**	SUPPORTO	SUPPORT	SUPPORT	HALTER	SOPORTE
42	**512190**	FUSIBILE	FUSE	FUSIBLE	SCHMELZSICHERUNG	FUSIBLE
43	**536776**	COCLEA	ARCHIMEDES SCREW	VIS D'ARCHIMEDE	SCHNECKE	TORNILLO SIN FIN
44	**521491**	LIMITATORE DI PICCO	CURRENT LIMITER	LIMITATEUR DE COURANT	ANLAUFSTROMBEGRENZER	LIMITADOR DE CORIENTE
45	**521650**	TERMOSTATO 75°	THERMOSTAT 75°	THERMOSTAT 75°	THERMOSTAT 75°	TERMOSTATO 75°
46	**512999**	RESISTENZA	HEATING Element	ELEMENT Chauffant	HEIZELEMENT	RESISTENCIA
48	**512767**	MOTORE	MOTOR	MOTEUR	MOTOR	MOTOR
54	**521664**	TIMER	TIMER	PROGRAMMATEUR	ZEITSCHALTUHR	TIMER
55	**536579**	VENTOLA JOHNSON	FAN JOHNSON	HELICE JOHNSON	FLUGELRAD JOHNSON	VENTILADOR JOHNSON
57	**513133**	LAMPADA	LAMP	LAMPE	LAMPE	LAMPARA
58	**536690**	CONVOGLIATORE	DUCT	CONVOYEUR	ABDECKUNG	TRANSPORTADOR
62	**512327**	DIODO	DIODE	DIODE	DIODE	DIODO
63	**512782**	DIODO	DIODE	DIODE	DIODE	DIODO
64	**611916**	MOLLA	SPRING	RESSORT	FEDER	MUELLE
65	**513084**	TRASFORMATORE	TRANSFORMER	TRANSFORMATEUR	TRANSFORMATOR	TRANSFORMADOR
66	**512633**	CONDENSAT. 0,95uF	CAPACITOR 0,95uF	CONDENSATEUR 0,95uF	KONDENSATOR 0,95uF	CONDENSAD. 0,95uF
67	**536365**	SUPPORTO	SUPPORT	SUPPORT	HALTER	SOPORTE
68	**612004**	MOLLA	SPRING	RESSORT	FEDER	MUELLE
69	**511854**	MICROINTERRUTTORE	MICROSWITCH	MICRORUPTEUR	MIKROSCHALTER	MICROINTERRUPTOR
70	**511855**	MICROINTERRUTTORE	MICROSWITCH	MICRORUPTEUR	MIKROSCHALTER	MICROINTERRUPTOR
71	**536366**	CAMMA	CAM	CAME	NOCKE	LEVA
72	**536367**	CAMMA	CAM	CAME	NOCKE	LEVA