0119008832

DE' LONGHI "EU" MAK 346Y
GIALLO - YELLOW

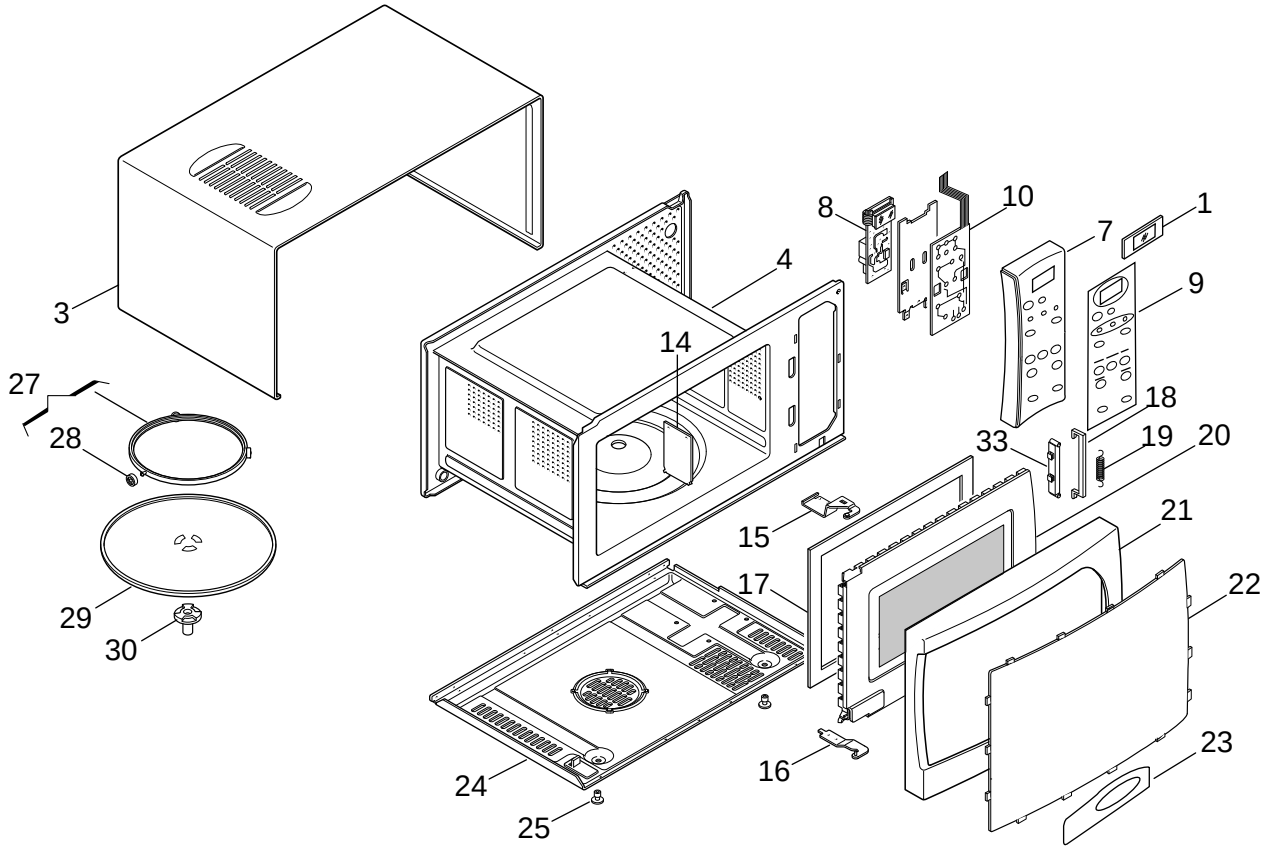

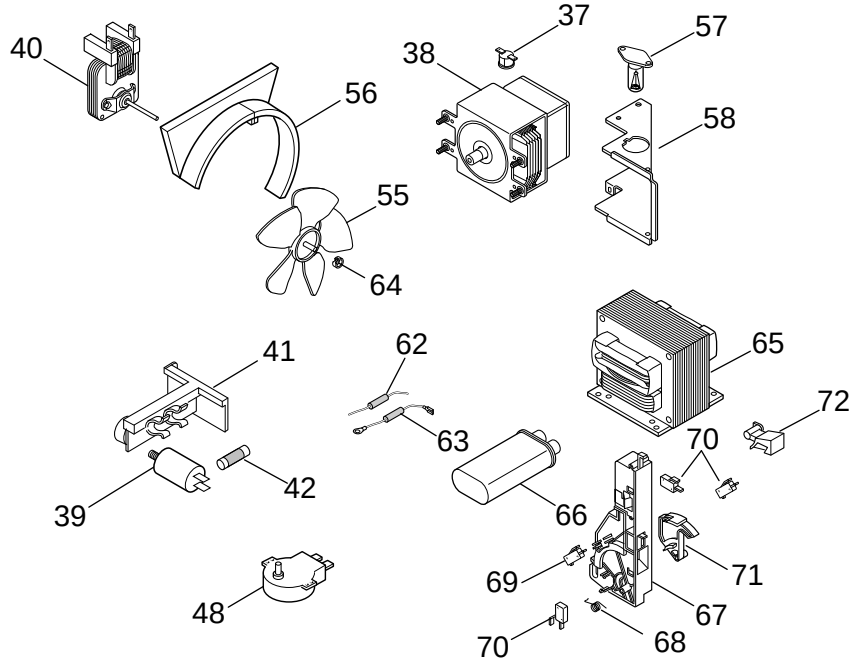

DLS SERVICE DE'LONGHI 'EU' MAK346Y YELLOW Cod.0119008832

Pos	Codice	Italiano	English	Francais	Deutsch	Espanol
01	**5919107400**	VETRINO	GLASS	VERRE	GLAS	VIDRIO
03	**7019106300**	MANTELLO	HOUSING	ENVELOPPE	GEHAEUSE	Chasis Envolvente
04	**709189**	CAVITA	CAVITY	CAVITE	HOHLRAUM	CAVIDAD
07	**5319148000**	CRUSCOTTO	CONTROL PANEL	Tableau deCommande	BEDIENUNGSBLENDE	Marco Panel Mandos
08	**5219100400**	SCHEDA	BOARD	FICHE	PLATINE	FICHA
09	**5419128600**	ETICHETTA	LABEL	ETIQUETTE	AUFKLEBER	ETIQUETA
10	**5219100900**	MEMBRANA	MEMBRANE	MEMBRANE	MEMBRANE	MAMBRABA
14	**536379**	CHIUSURA	CLOSURE	FERMETURE	VERSCHLUSS	CIERRE
15	**709183**	CERNIERA SUP.	HINGE UPPER	CHARNIERE SUP.	SCHARNIER (OBEN)	BISAGRA SUP.
16	**709162**	CERNIERA INF.	HINGE LOWER	CHARNIERE INF.	SCHARNIER (UNTEN)	BISAGRA INF.
17	**536676**	CORNICE	FRAME	ENCADREMENT	RAHMEN	MARCO
18	**536384**	GANCIO	HOOK	CROCHET	HAKEN	GANCHO
19	**612003**	MOLLA	SPRING	RESSORT	FEDER	MUELLE
20	**7319110300**	PORTA	DOOR	PORTE	TUER	PUERTA
21	**5319146900**	CORNICE	FRAME	ENCADREMENT	RAHMEN	MARCO
22	**5919140700**	FRONTALE	FRONT PANEL	PANNEAU AVANT	VORDERWAND	PARTE DELANTERA
23	**5319146800**	MANIGLIA	HANDLE	POIGNEE	GRIFF	MANILLA
24	**690512**	BASAMENTO	BASE	SOCLE	UNTERGESTELL	BASE
25	**532710**	GOMMINO	RUBBER PAD	PARE CHOCS	PUFFER	GUARNICION
27	**5519110600**	SUPPORTO	SUPPORT	SUPPORT	HALTER	SOPORTE
28	**536792**	RUOTA	CASTOR	ROULETTE	RAD	RUEDA
29	**537031**	PIATTO	PLATE	PLAT	TELLER	PLATO
30	**537301**	TRASCINATORE	PULLER	ENTRAINEUR	MITNEHMER	ARRASTRADOR
33	**536347**	GUIDA	RUNNER	GLISSIERE	FUEHRUNG	GUIA
37	**521466**	TERMOSTATO	THERMOSTAT	THERMOSTAT	THERMOSTAT	TERMOSTATO
38	**512985**	MAGNETRON SENZA PERNI	MAGNETRON WITHOUT PINS	MAGNETRON SANS PIVOTS	MAGNETRON OHNE STIFTE	MAGNETRON SIN PERNOS
39	**512630**	FILTRO	FILTER	FILTRE	FILTER	FILTRO
40	**512961**	MOTORE JOHNSON	MOTOR JOHNSON	MOTEUR JOHNSON	MOTOR JOHNSON	MOTOR JOHNSON
41	**5519114200**	SUPPORTO	SUPPORT	SUPPORT	HALTER	SOPORTE
42	**512190**	FUSIBILE	FUSE	FUSIBLE	SCHMELZSICHERUNG	FUSIBLE
48	**512767**	MOTORE	MOTOR	MOTEUR	MOTOR	MOTOR
55	**536579**	VENTOLA JOHNSON	FAN JOHNSON	HELICE JOHNSON	FLUGELRAD JOHNSON	VENTILADOR JOHNSON
56	**536776**	COCLEA	ARCHIMEDES SCREW	VIS D'ARCHIMEDE	SCHNECKE	TORNILLO SIN FIN
57	**5119103700**	LAMPADA	LAMP	LAMPE	LAMPE	LAMPARA
58	**5319126100**	CONVOGLIATORE	DUCT	CONVOYEUR	ABDECKUNG	TRANSPORTADOR
62	**512327**	DIODO	DIODE	DIODE	DIODE	DIODO
63	**512782**	DIODO	DIODE	DIODE	DIODE	DIODO
64	**611916**	MOLLA	SPRING	RESSORT	FEDER	MUELLE
65	**5119101600**	TRASFORMATORE	TRANSFORMER	TRANSFORMATEUR	TRANSFORMATOR	TRANSFORMADOR
66	**5119101300**	CONDENSAT. 1uF	CAPACITOR 1uF	CONDENSATEUR 1uF	KONDENSATOR 1uF	CONDENSAD.1uF
67	**536365**	SUPPORTO	SUPPORT	SUPPORT	HALTER	SOPORTE
68	**612004**	MOLLA	SPRING	RESSORT	FEDER	MUELLE
69	**511854**	MICROINTERRUTTORE	MICROSWITCH	MICRORUPTEUR	MIKROSCHALTER	MICROINTERRUPTOR
70	**511855**	MICROINTERRUTTORE	MICROSWITCH	MICRORUPTEUR	MIKROSCHALTER	MICROINTERRUPTOR
71	**536366**	CAMMA	CAM	CAME	NOCKE	LEVA
72	**536367**	CAMMA	CAM	CAME	NOCKE	LEVA