DE'LONGHI "EU" KF 1400

Frullatore Blu JOLLY Line Classic

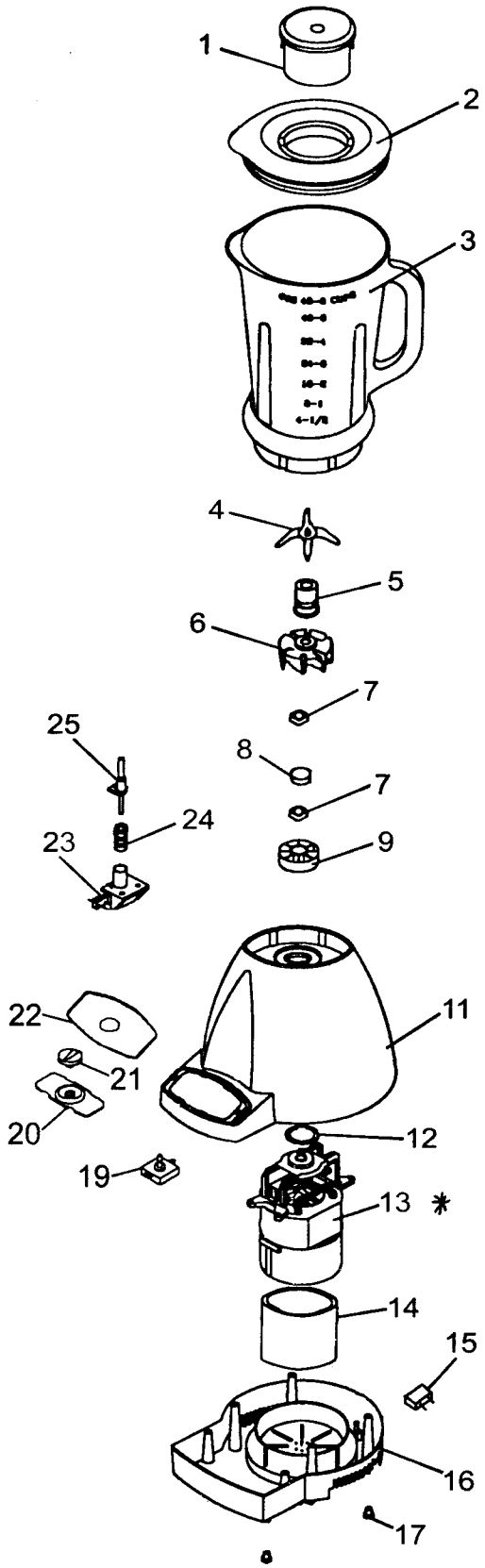

DLS SERVICE

DE'LONGHI 'EU' KF1400 Blu 0177453000

Pos	Codice	Italiano	English	Francais	Deutsch	Espanol
01	**HS1041**	MISURINO	MEASURING SPOON	CUILLIERE	MESSBECHER	DE DOSAGE MEDIDOR
02	**HS1042**	COPERCHIO	COVER	COUVERCLE	DECKEL	TAPA
03	**HS1043**	CARAFFA	CARAFE	CARAFE	KARAFFE	GARRAFA
04	**HS1003**	LAMA	BLADE	LAME	KLINGE	CUCHILLA
05	**HS1004**	DISTANZIALE	SPACER	ENTRETOISE	DISTANZSTUECK	DISTANCIADOR
06	**HS1005**	ADATTATORE Maschio	ADAPTER	ADAPTATEUR	PASSTUECK	ADAPTADOR
07	**HS1010**	DADO	NUT	ECROU	MUTTER	DADO
08	**HS1011**	TAPPO	STOPPER	BOUCHON	STOEPSEL	TAPON
09	**HS1006**	ADATTATORE Femmina	ADAPTER	ADAPTATEUR	PASSTUECK	ADAPTADOR
11	**HS1027**	INVOLUCRO	CASING	ENVELOPPE	GEHAEUSE	ENVOLTURA
12	**HS1008**	GUARNIZIONE	GASKET	JOINT	DICHTUNG	GUARNICION
13	**HS1081**	MOTORE	MOTOR	MOTEUR	MOTOR	MOTOR
14	**HS1034**	ISOLANTE	INSULATOR	ISOLANT	ISOLIERSTOFF	AISLANTE
15	**HS1036**	FILTRO RETE	NOISE FILTER	FILTRE Antiparasites	ENTSTOERFILTER	FILTRO
16	**HS1035**	FONDO	BOTTOM	FOND	BODEN	FONDO
17	**HS1014**	PIEDINO	FOOT	PIED	FUSS	PIE
19	**HS1037**	INTERRUTTORE	SWITCH	INTERRUPTEUR	SCHALTER	INTERRUPTOR
20	**HS1038**	SUPPORTO	SUPPORT	SUPPORT	HALTER	SOPORTE
21	**HS1039**	MANOPOLA	KNOB	BOUTON	KNOPF	MANDO
22	**HS1040**	ETICHETTA	LABEL	ETIQUETTE	AUFKLEBER	ETIQUETA
23	**HS1020**	MICROINTERRUTTORE	MICROSWITCH	MICRORUPTEUR	MIKROSCHALTER	MICROINTERRUPTOR
24	**HS1021**	MOLLA	SPRING	RESSORT	FEDER	MUELLE
25	**HS1022**	PERNO	PIN	PIVOT	STIFT	PERNO