0125576402

DE'LONGHI "INT" F 415 CZ

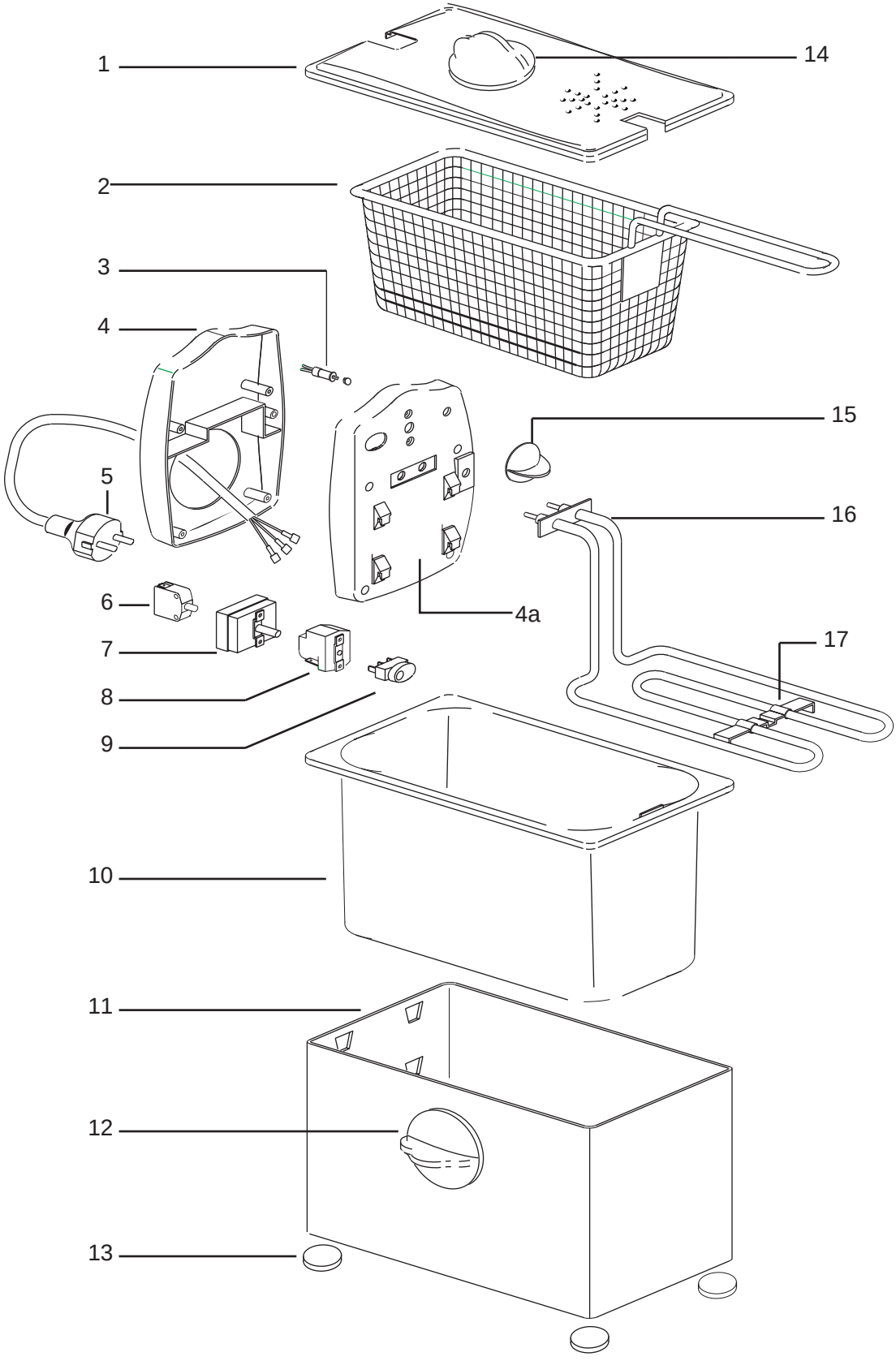

DLS SERVICE

DE’LONGHI ’INT’ F415CZ Cod.0125576402

Pos	Codice	Italiano	English	Francais	Deutsch	Espanol
01	**IC1042**	COPERCHIO	COVER	COUVERCLE	DECKEL	TAPA
02	**IC1002**	CESTELLO	BASKET	PANIER	KORB	CESTO
03	**IC1003**	SPIA	WARNING LIGHT	TEMOIN LUMINEUX	KONTROLLEUCHTE	PILOTO
04	**IC1004**	GUSCIO ANT.	Front Protection	ENVELOPPE ANT.	GEHAEUSE VORN	VAINA ANT.
04A	**IC1005**	GUSCIO POST.	Rear Protection	ENVELOPPE Post.	GEHAEUSE HINTEN	VAINA POST.
05	**IC1006**	CAVO ALIMENTAZIONE	POWER SUPPLY CORD	CORDON D'ALIMENTATION	NETZKABEL	CABLE ALIMENTACION
06	**IC1007**	MICROINTERRUTTORE	MICROSWITCH	MICRORUPTEUR	MIKROSCHALTER	MICROINTERRUPTOR
07	**IC1008**	TERMOSTATO	THERMOSTAT	THERMOSTAT	THERMOSTAT	TERMOSTATO
08	**IC1009**	TERMOSTATO	THERMOSTAT	THERMOSTAT	THERMOSTAT	TERMOSTATO
09	**IC1010**	INTERRUTTORE	SWITCH	INTERRUPTEUR	SCHALTER	INTERRUPTOR
10	**IC1012**	BACINELLA	TRAY	BAC	SCHALE	CUBETA
11	**IC1014**	CONTENITORE	CONTAINER	RESERVOIR	BEHAELTER	CONTENEDOR
12	**IC1015**	IMPUGNATURA	HANDLE	POIGNEE	GRIFF	EMPUÑADURA
13	**IC1016**	PIEDINO	FOOT	PIED	FUSS	PIE
14	**IC1017**	IMPUGNATURA	HANDLE	POIGNEE	GRIFF	EMPUÑADURA
15	**IC1018**	MANOPOLA	KNOB	BOUTON	KNOPF	MANDO
16	**IC1020**	RESISTENZA	HEATING Element	ELEMENT Chauffant	HEIZELEMENT	RESISTENCIA
17	**IC1021**	SUPPORTO	SUPPORT	SUPPORT	HALTER	SOPORTE