DE' LONGHI "INT/SA/RU" F336

BIANCO - WHITE

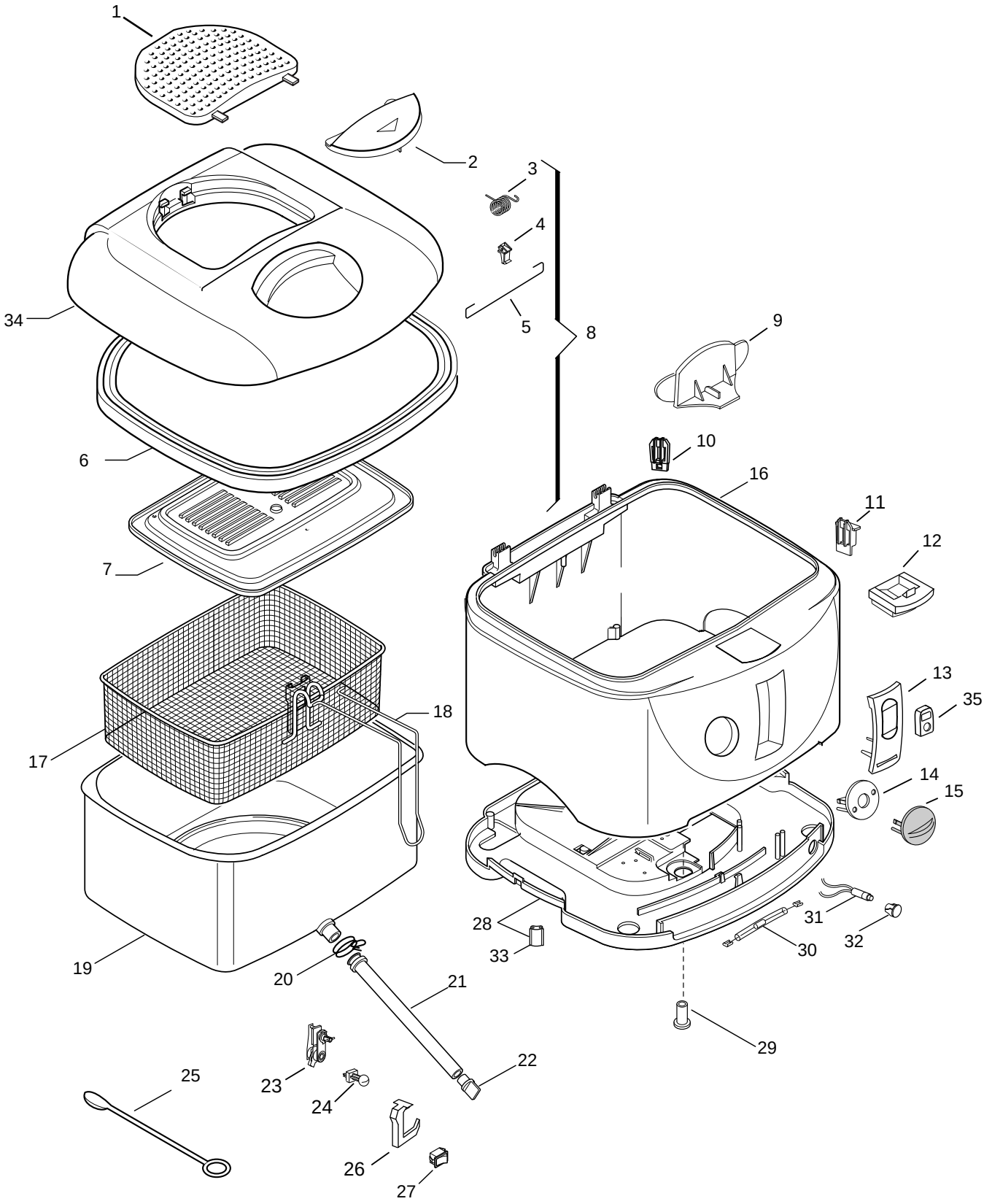

DLS SERVICE

DE’LONGHI ’INT/SA/RU’ F336 Cod.0125011800

Pos	Codice	Italiano	English	Francais	Deutsch	Espanol
01	**5325113600**	GRIGLIA	GRID	GRILLE	GITTER	PARRILLA
02	**5325149800**	MANIGLIA	HANDLE	POIGNEE	GRIFF	MANILLA
03	**6125104700**	MOLLA	SPRING	RESSORT	FEDER	MUELLE
04	**5325149900**	GANCIO	HOOK	CROCHET	HAKEN	GANCHO
05	**6125104600**	MOLLA	SPRING	RESSORT	FEDER	MUELLE
06	**536561**	GUARNIZIONE	GASKET	JOINT	DICHTUNG	GUARNICION
07	**6925105300**	CONTROCOPERCHIO	INNER COVER	CONTRE COUVERCLE	GEGENDECKEL	DOBLE TAPA
08	**7325129800**	COPERCHIO	COVER	COUVERCLE	DECKEL	TAPA
09	**5325151300**	AVVOLGICAVO	CABLE WINDER	ENROULEUR	KABELAUFWICKLUNG	De Cable Recogecables
10	**5325141900**	DISTANZIALE	SPACER	ENTRETOISE	DISTANZSTUECK	DISTANCIADOR
11	**5325101800**	DISTANZIALE	SPACER	ENTRETOISE	DISTANZSTUECK	DISTANCIADOR
12	**5325150300**	BLOCCHETTO	BLOCK	BLOC	STUECK	BLOQUE
13	**5325150500**	PORTINA	DOOR	PORTE	TUER	PUERTA
14	**5325151100**	BOCCOLA	BUSH	BOUCLE	BUCHSE	CASQUILLO
15	**5325151000**	MANOPOLA	KNOB	BOUTON	KNOPF	MANDO
16	**5925118100**	INVOLUCRO	CASING	ENVELOPPE	GEHAEUSE	ENVOLTURA
17	**709089**	CESTELLO	BASKET	PANIER	KORB	CESTO
18	**5525100000**	IMPUGNATURA	HANDLE	POIGNEE	GRIFF	EMPUÑADURA
19	**7325127800**	VASCA	PAN	CUVE	BEHAELTER	CUBA
20	**9824800015**	FASCETTA	CLIP CLAMP	COLLIER	SCHELLE	ABRAZADERA
21	**536159**	TUBO	TUBE	TUBE	ROHR	TUBO
22	**5325120600**	TAPPO	STOPPER	BOUCHON	STOEPSEL	TAPON
23	**5225100100**	TERMOSTATO	THERMOSTAT	THERMOSTAT	THERMOSTAT	TERMOSTATO
24	**5325142600**	PROLUNGA	EXTENSION	RALLONGE	VERLAENGERUNG	PROLONGACION
25	**536330**	SPAZZOLINO	BRUSH	BROSSE	BUERSTCHEN	CEPILLO
26	**5325150400**	SUPPORTO INTERRUTTORE	SWITCH HOLDER	SUPPORT INTERRUPTEUR	SCHALTER HALTERUNG	SOPORTE INTERRUPTOR
27	**5125100300**	INTERRUTTORE	SWITCH	INTERRUPTEUR	SCHALTER	INTERRUPTOR
28	**5525108800**	BASAMENTO	BASE	SOCLE	UNTERGESTELL	BASE
29	**5325106400**	BOCCOLA	BUSH	BOUCLE	BUCHSE	CASQUILLO
30	**511876**	TCO 192°	TCO 192°	SEC. DE SURCHAUFF. 192°	UEBERTEMP.SICHERUNG 192°	FUSIBILE TERMICO 192°
31	**513116**	SPIA	WARNING LIGHT	TEMOIN LUMINEUX	KONTROLLEUCHTE	PILOTO
32	**536685**	GEMMA	LENS	LENTILLE	LINSE	PILOTO
33	**532233**	GOMMINO	RUBBER PAD	PARE CHOCS	PUFFER	GUARNICION
34	**5325150000**	COPERCHIO	COVER	COUVERCLE	DECKEL	TAPA
35	**5525110000**	TIMER	TIMER	PROGRAMMATEUR	ZEITSCHALTUHR	TIMER