DE' LONGHI "EU" EO3870

BIANCO - NERO / BLACK - WHITE

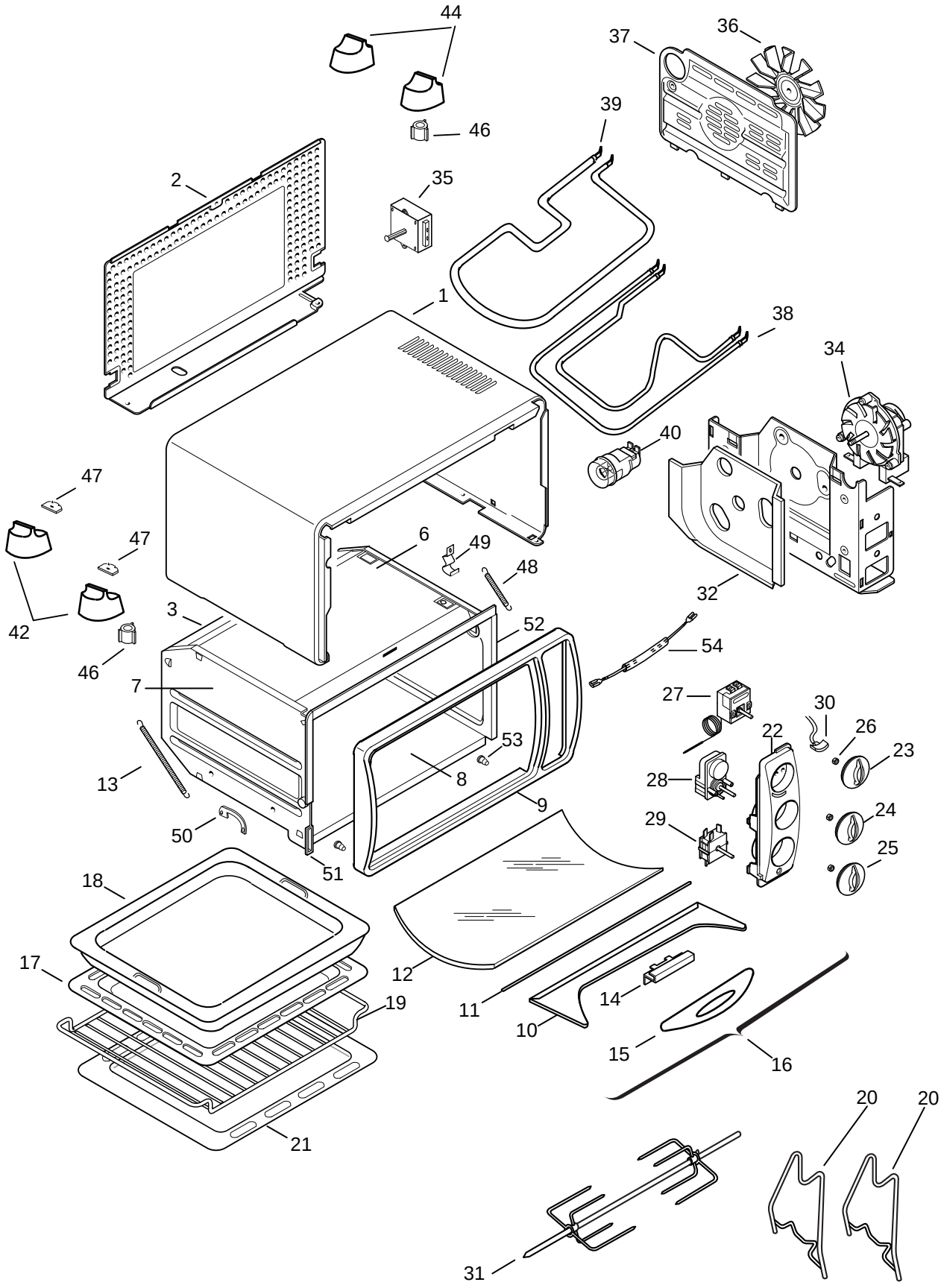

DLS SERVICE DE'LONGHI 'EU' EO3870 BLACK/WHITE Cod.0118487502

Pos	Codice	Italiano	English	Francais	Deutsch	Espanol
01	**7018109400**	MANTELLO	HOUSING	ENVELOPPE	GEHAEUSE	Chasis Envolvente
02	**6918108500**	SCHIENALE	REAR PANEL	PANNEAU ARRIERE	RUECKWAND	RESPALDO
03	**7018108800**	FONDO	BOTTOM	FOND	BODEN	FONDO
06	**6918109100**	SEPARATORE	SEPARATOR	SEPARATEUR	TRENNER	SEPARADOR
07	**7018108700**	FIANCO SX	SIDE LEFT	COTE GAUCHE	SEITE LINKS	LADO IZQUIERDO
08	**6918107900**	BASAMENTO	BASE	SOCLE	UNTERGESTELL	BASE
09	**7018109700**	CORNICE	FRAME	ENCADREMENT	RAHMEN	MARCO
10	**7118101800**	SUPPORTO	SUPPORT	SUPPORT	HALTER	SOPORTE
11	**6118101100**	ASTA	ROD	TIGE	STANGE	BARRA
12	**5318111500**	VETRO	GLASS	VERRE	GLAS	VIDRIO
13	**6118101500**	MOLLA	SPRING	RESSORT	FEDER	MUELLE
14	**7018108500**	SQUADRETTA	BRACKET	EQUERRE	WINKEL	ESCUADRA
15	**5318114600**	MANIGLIA	HANDLE	POIGNEE	GRIFF	MANILLA
16	**7318134100**	PORTA	DOOR	PORTE	TUER	PUERTA
17	**7018110100**	LECCARDA	DRIP PAN	LECHEFRITE	FETTPFANNE	GRASERA
18	**7018110200**	LASAGNE TRAY	LASAGNE TRAY	LASAGNE TRAY	LASAGNE TRAY	LASAGNE TRAY
19	**6118101000**	GRIGLIA	GRID	GRILLE	GITTER	PARRILLA
20	**6118101800**	SUPPORTO	SUPPORT	SUPPORT	HALTER	SOPORTE
21	**7018109000**	VASSOIO	TRAY	PLATEAU	TABLETT	BANDEA
22	**5918119500**	CRUSCOTTO	CONTROL PANEL	Tableau deCommande	BEDIENUNGSBLENDE	Marco Panel Mandos
23	**5918119200**	MANOPOLA	KNOB	BOUTON	KNOPF	MANDO
24	**5918119300**	MANOPOLA TIMER	TIMER KNOB	BOUTON DE LA MINUTERIE	KURZZEITWECKER KNOPF	MANDO CUENTAMINUTOS
25	**5918119400**	MANOPOLA	KNOB	BOUTON	KNOPF	MANDO
26	**611900**	MOLLA	SPRING	RESSORT	FEDER	MUELLE
27	**5218101700**	TERMOSTATO	THERMOSTAT	THERMOSTAT	THERMOSTAT	TERMOSTATO
28	**5218101500**	TIMER ITALORA	TIMER ITALORA	PROGRAMMATEUR ITALORA	TIMER ITALORA	TIMER ITALORA
28	**5218101800**	TIMER CHINA	TIMER CHINA	MINUTERIE CHINA	TIMER CHINA	TIMER CHINA
28	**5218102300**	TIMER COUPATAN	TIMER COUPATAN	PROGRAMMATEUR COUPATAN	TIMER COUPATAN	TIMER COUPATAN
29	**5218101900**	COMMUTATORE	Change Over Switch	COMMUTATEUR	UMSCHALTER	CONMUTADOR
30	**5118104800**	SPIA	WARNING LIGHT	TEMOIN LUMINEUX	KONTROLLEUCHTE	PILOTO
31	**5518109800**	GIRARROSTO	TURNSPIT	TOURNEBROCHE	BRATENSPLESS	ASADOR AUTOMATICO
32	**5318116200**	ISOLANTE	INSULATOR	ISOLANT	ISOLIERSTOFF	AISLANTE
34	**5118104200**	MOTORE	MOTOR	MOTEUR	MOTOR	MOTOR
35	**5118104100**	MOTORIDUTTORE	GEARMOTOR	MOTOREDUCTEUR	GETRIEBEMOTOR	MOTORREDUCTOR
36	**607702**	VENTOLA	FAN	HELICE	FLUEGELRAD	VENTILADOR
37	**7018109100**	COCLEA	ARCHIMEDES SCREW	VIS D'ARCHIMEDE	SCHNECKE	TORNILLO SIN FIN
38	**5118103800**	RESISTENZA INF.	Heating Element Low	Element Chauffant Inf.	HEIZELEMENT UNTEN	RESISTENCIA INF.
39	**5118103600**	RESISTENZA SUP.	Heating Element Up	Element Chauf. Sup.	HEIZELEMENT OBEN	RESISTENCIA SUP.
40	**512609**	LAMPADA	LAMP	LAMPE	LAMPE	LAMPARA
42	**5318114300**	PIEDINO SX	FOOT LEFT	PIED GAUCHE	FUSS LINKS	PIE IZQUIERDO
44	**5318114200**	PIEDINO DX	FOOT RIGHT	PIED DROITE	FUSS RECHTS	PIE DERECHO
46	**532710**	GOMMINO	RUBBER PAD	PARE CHOCS	PUFFER	GUARNICION
47	**5318114400**	DISTANZIALE	SPACER	ENTRETOISE	DISTANZSTUECK	DISTANCIADOR
48	**6118101700**	MOLLA	SPRING	RESSORT	FEDER	MUELLE
49	**6118101300**	GANCIO	HOOK	CROCHET	HAKEN	GANCHO
50	**7018108400**	LEVA	LEVER	LEVIER	HEBEL	PALANCA
51	**5318114500**	BLOCCHETTO	BLOCK	BLOC	STUECK	BLOQUE
52	**7018108900**	FIANCO DX	SIDE RIGHT	COTE DROITE	SEITE RECHTS	LADO DERECHA
53	**5318119800**	GOMMINO	RUBBER PAD	PARE CHOCS	PUFFER	GUARNICION
54	**5218101100**	TCO	TCO	SecuriteDeSurchauf.	UEbertemperatursicherung	Fusibile Termico