0132151024

DE' LONGHI "INT/SA/RU/SKA" EC200CD

ROSSO - RED

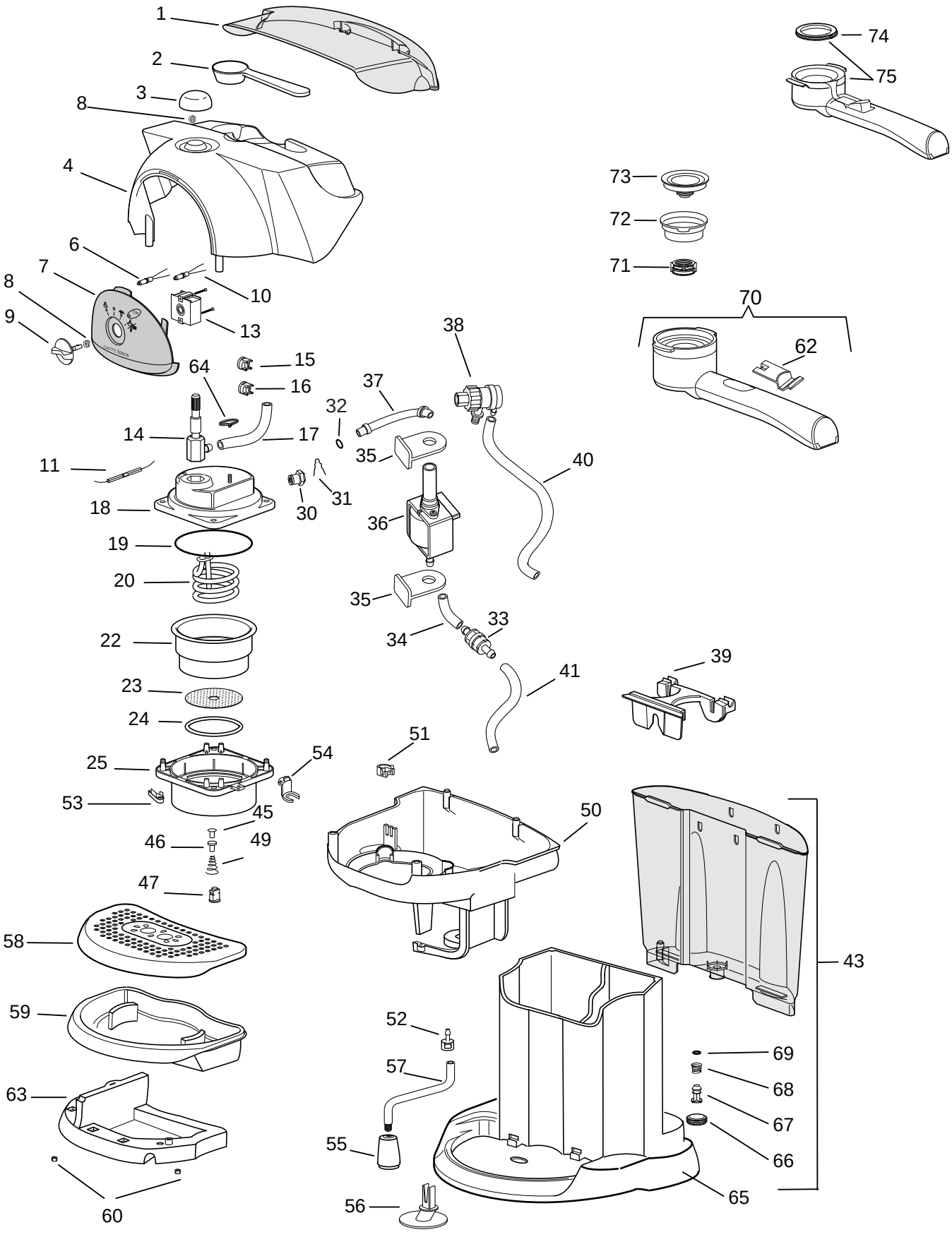

DLS SERVICE E’LONGHI ’INT/SA/RU/SKA’ EC200CD Cod.0132151024

Pos	Codice	Italiano	English	Francais	Deutsch	Espanol
001	**5532109400**	COPERCHIO	COVER	COUVERCLE	DECKEL	TAPA
002	**5332107900**	MISURINO	MEASURING SPOON	CUILLIERE	MESSBECHER	DE DOSAGE MEDIDOR
003	**5532109300**	MANOPOLA	KNOB	BOUTON	KNOPF	MANDO
004	**5332124400**	COPERTURA	COVER	COUVERTURE	VERSCHLUSS	REVESTIMIENTO
006	**512353**	SPIA ROSSA	Red Warning Light	Temoin Lum. Rouge	Kontrolleuchte Rot	Piloto Rojo
007	**5932105800**	CRUSCOTTO	CONTROL PANEL	Tableau deCommande	BEDIENUNGSBLENDE	Marco Panel Mandos
008	**611905**	MOLLA	SPRING	RESSORT	FEDER	MUELLE
009	**5532107500**	MANOPOLA	KNOB	BOUTON	KNOPF	MANDO
010	**512354**	SPIA	WARNING LIGHT	TEMOIN LUMINEUX	KONTROLLEUCHTE	PILOTO
011	**511816**	TERMOFUSIBILE	FUSE	FUSIBLE	SCHMELZSICHERUNG	FUSIBLE
013	**5132102200**	COMMUTATORE	Change Over Switch	COMMUTATEUR	UMSCHALTER	CONMUTADOR
014	**7332127900**	RUBINETTO	TAP	ROBINET	HAHN	GRIFO
015	**512271**	TERMOSTATO 125°	THERMOSTAT 125°	THERMOSTAT 125°	THERMOSTAT 125°	TERMOSTATO 125°
016	**5232100600**	TERMOSTATO 105°	THERMOSTAT 105°	THERMOSTAT 105°	THERMOSTAT 105°	TERMOSTATO 105°
017	**536281**	TUBO	TUBE	TUBE	ROHR	TUBO
019	**533216**	GUARNIZIONE	GASKET	JOINT	DICHTUNG	GUARNICION
020	**512159**	RESISTENZA	HEATING Element	ELEMENT Chauffant	HEIZELEMENT	RESISTENCIA
022	**685202**	CALDAIA INF.	BOILER LOWER	CHAUDIERE INF.	HEIZKESSEL UNTEN	CALDERA INF.
023	**6032101200**	DIFFUSORE	DIFFUSER	DIFFUSEUR	DIFFUSOR	DIFUSOR
024	**533218**	GUARNIZIONE	GASKET	JOINT	DICHTUNG	GUARNICION
025	**7032101500**	SUPPORTO	SUPPORT	SUPPORT	HALTER	SOPORTE
031	**6132101300**	MOLLA	SPRING	RESSORT	FEDER	MUELLE
032	**536369**	GUARNIZIONE	GASKET	JOINT	DICHTUNG	GUARNICION
033	**VT205651**	FILTRO	FILTER	FILTRE	FILTER	FILTRO
034	**5332122800**	TUBO	TUBE	TUBE	ROHR	TUBO
035	**534848**	SUPPORTO	SUPPORT	SUPPORT	HALTER	SOPORTE
036	**512502**	POMPA	PUMP	POMPE	PUMPE	BOMBA
037	**5532109000**	TUBO	TUBE	TUBE	ROHR	TUBO
038	**7332128100**	VALVOLA	VALVE	SOUPAPE	VENTIL	VALVULA
039	**5332120300**	CERNIERA	HINGE	CHARNIERE	SCHARNIER	BISAGRA
040	**536321**	TUBO	TUBE	TUBE	ROHR	TUBO
041	**5332125200**	TUBO	TUBE	TUBE	ROHR	TUBO
043	**7332128000**	SERBATOIO	TANK	RESERVOIR	TANK	DEPOSITO
045	**535129**	VALVOLA	VALVE	SOUPAPE	VENTIL	VALVULA
046	**621986**	ANELLO	RING	ANNEAU	RING	ANILLO
047	**6232103400**	GRANO	DOWEL	VIS	STIFTSCHRAUBE	CLAVIJA
049	**6132101600**	MOLLA	SPRING	RESSORT	FEDER	MUELLE
050	**5332124300**	SUPPORTO	SUPPORT	SUPPORT	HALTER	SOPORTE
051	**5332120500**	DISTANZIALE	SPACER	ENTRETOISE	DISTANZSTUECK	DISTANCIADOR
052	**535733**	SNODO	JOINT	ARTICULATION	GELENK	ARTICULACION
053	**5332120200**	FERMO	STOP	ARRET	SPERRUNG	TOPE
054	**5332120700**	BLOCCHETTO	BLOCK	BLOC	STUECK	BLOQUE
055	**535789**	CAPPUCCINATORE	FROTHER	BUSE CAFE CREME	CAPPUCINODUESE	Accesorio Capuchino
056	**5332117200**	PESTELLO	PRESSING DEVICE	PRESSOIR	STOPFER	PISON
057	**7032103400**	TUBO	TUBE	TUBE	ROHR	TUBO
058	**5332120400**	POGGIATAZZE	DRIP TRAY	APPUIE TASSES	TASSENAUFLAGE	APOYA TAZAS
059	**5332120000**	VASCHETTA	TRAY	CUVETTE	BEHAELTER	CUBETA
060	**532233**	GOMMINO	RUBBER PAD	PARE CHOCS	PUFFER	GUARNICION
062	**534714**	LEVA	LEVER	LEVIER	HEBEL	PALANCA
063	**5532109200**	FONDO	BOTTOM	FOND	BODEN	FONDO
064	**9824800009**	FASCETTA	CLIP CLAMP	COLLIER	SCHELLE	ABRAZADERA
065	**5532109500**	SCOCCA	BODY	CARROSSERIE	KASTEN	CARCASA
066	**5332108700**	GUARNIZIONE	GASKET	JOINT	DICHTUNG	GUARNICION
067	**5332109000**	PISTONE	PISTON	PISTON	KOLBEN	PISTON
068	**6132100800**	MOLLA	SPRING	RESSORT	FEDER	MUELLE
069	**5332111600**	O-RING	O-RING	JOINT OR	O-RING	O-RING
070	**7332126700**	COPPETTA	SUMP	COUPELLE	SCHALE	COPITA
071	**5332123100**	GHIERA	RING NUT	COLLIER DE SERR.	NUTMUTTER	CASQUILLO
072	**6032102400**	FILTRO	FILTER	FILTRE	FILTER	FILTRO
073	**5332108700**	GUARNIZIONE	GASKET	JOINT	DICHTUNG	GUARNICION
074	**5332117600**	GUARNIZIONE	GASKET	JOINT	DICHTUNG	GUARNICION
18	**6932101100**	CALDAIA SUP.	BOILER UPPER	CHAUDIERE SUP.	HEIZKESSEL OBEN	CALDERA SUP.
30	**7032103600**	RACCORDO	CONNECTION	RACCORD	ANSCHLUSS	JUNTURA
75	**7332122300**	COPPETTA	SUMP	COUPELLE	SCHALE	COPITA