0132109001

DE' LONGHI "EU" BAR50
NERO / BLACK

VERSIONE ELC.2

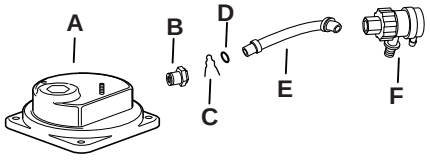

ATTENZIONE

PER I MODELLI INDICATI COME **ELC.2** NELLA TARGA CARATTERISTICHE E NEL CODICE A BARRE: I PEZZI INDICATI VANNO ORDINATI UTILIZZANDO I CODICI SEGNALATI IN LETTERE

ATTENTION

FOR THE MODEL **ELC.2** (SEE CHARACTERISTIC LABEL AND BAR CODE) THE SPARE PARTS HAVE TO BE ORDERED USING THE LETTERS ABOVE.

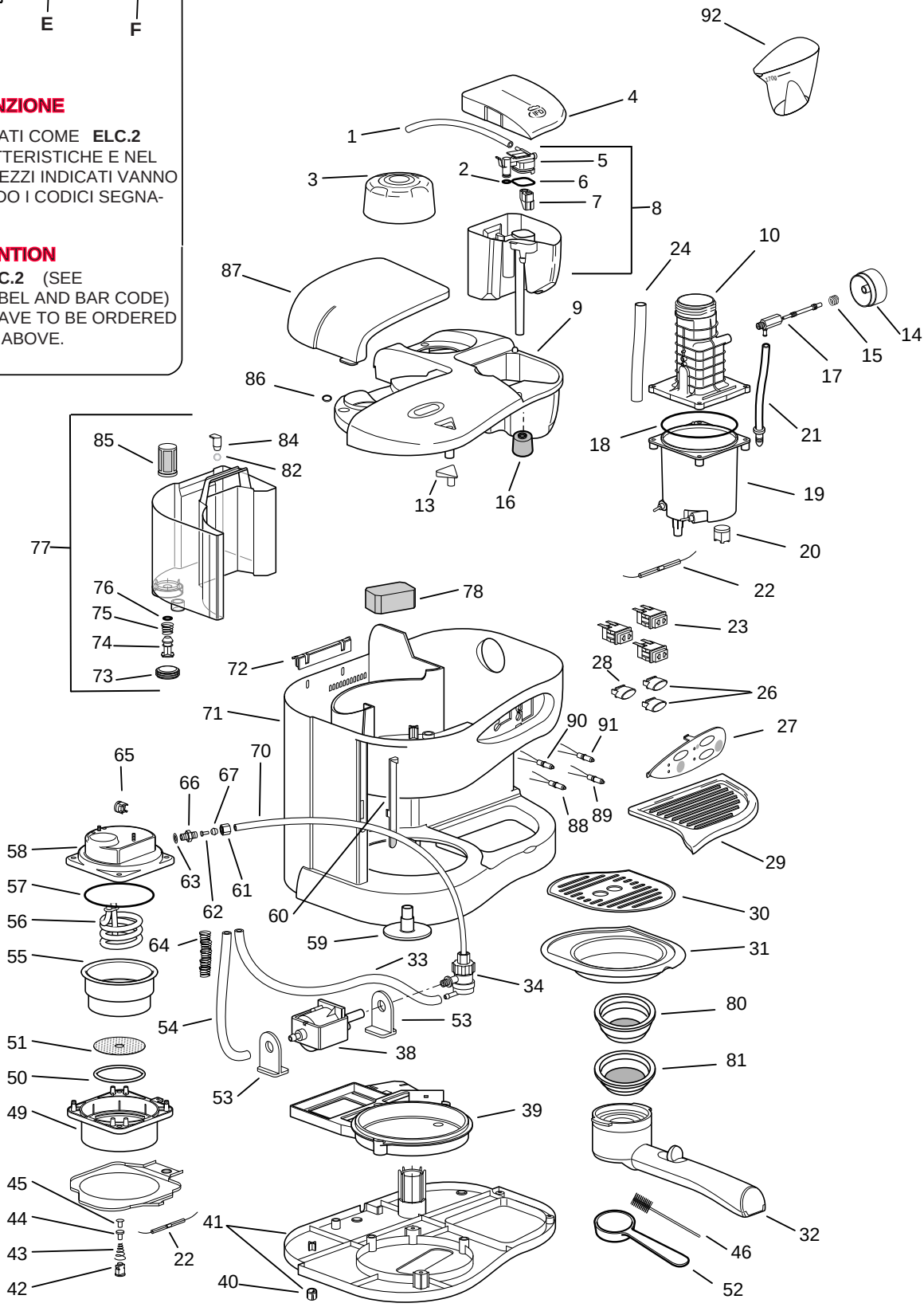

DE'LONGHI 'EU' BAR50 NERO Cod.0132109001

Pos	Codice	Italiano	English	Francais	Deutsch	Espanol
001	**5332101000**	TUBO	TUBE	TUBE	ROHR	TUBO
002	**535692**	GUARNIZIONE	GASKET	JOINT	DICHTUNG	GUARNICION
003	**5532101300**	TAPPO	STOPPER	BOUCHON	STOEPSEL	TAPON
004	**5932103200**	COPERCHIO	COVER	COUVERCLE	DECKEL	TAPA
005	**537175**	REGOLATORE	REGULATOR	REGULATEUR	REGLER	REGULADOR
006	**536372**	GUARNIZIONE	GASKET	JOINT	DICHTUNG	GUARNICION
007	**5332102100**	MIXER	MIXER	MIXEUR	MIXER	MIXER
008	**7332112400**	VASCHETTA	TRAY	CUVETTE	BEHAELTER	CUBETA
009	**5932103100**	COPERCHIO	COVER	COUVERCLE	DECKEL	TAPA
010	**7032101300**	CORPO	SHELL	CORPS	KOERPER	CUERPO
013	**5332109100**	TAPPO	STOPPER	BOUCHON	STOEPSEL	TAPON
014	**5532101000**	MANOPOLA	KNOB	BOUTON	KNOPF	MANDO
015	**611900**	MOLLA	SPRING	RESSORT	FEDER	MUELLE
016	**5332100600**	CAPPUCCIO	CAP	CHAPEAU	KAPPE	CAPUCHON
017	**7332102400**	RUBINETTO	TAP	ROBINET	HAHN	GRIFO
018	**535750**	GUARNIZIONE	GASKET	JOINT	DICHTUNG	GUARNICION
019	**7032100600**	CALDAIA	BOILER	CHAUDIERE	HEIZKESSEL	CALDERA
020	**521694**	TERMOSTATO	THERMOSTAT	THERMOSTAT	THERMOSTAT	TERMOSTATO
021	**537200**	RACCORDO	CONNECTION	RACCORD	ANSCHLUSS	JUNTURA
022	**511816**	TERMOFUSIBILE	FUSE	FUSIBLE	SCHMELZSICHERUNG	FUSIBLE
023	**512572**	INTERRUTTORE	SWITCH	INTERRUPTEUR	SCHALTER	INTERRUPTOR
024	**5332101100**	TUBO	TUBE	TUBE	ROHR	TUBO
026	**537238**	COPRITASTO NERO	PUSH BUTTON COVER BLACK	COUVRE POUSSOIR NOIR	TASTENABDECKUNG SCHWARZ	CUBRETECLA NIGRO
027	**5932103000**	CRUSCOTTO	CONTROL PANEL	Tableau deCommande	BEDIENUNGSBLENDE	Marco Panel Mandos
028	**5332115000**	COPRITASTO GRIGIO	PUSH BUTTON COVER GREY	COUVRE POUSSOIR GRIS	TASTENABDECKUNG GRAU	CUBRETECLA GRIS
029	**537233**	POGGIATAZZE	DRIP TRAY	APPUIE TASSES	TASSENAUFLAGE	APOYA TAZAS
030	**6232104000**	POGGIATAZZE	DRIP TRAY	APPUIE TASSES	TASSENAUFLAGE	APOYA TAZAS
031	**5332108400**	VASCHETTA	TRAY	CUVETTE	BEHAELTER	CUBETA
032	**7332109900**	COPPETTA	SUMP	COUPELLE	SCHALE	COPITA
033	**5332111500**	TUBO	TUBE	TUBE	ROHR	TUBO
034	**736620**	VALVOLA	VALVE	SOUPAPE	VENTIL	VALVULA
038	**512502**	POMPA	PUMP	POMPE	PUMPE	BOMBA
039	**5332108500**	SUPPORTO	SUPPORT	SUPPORT	HALTER	SOPORTE
040	**532233**	GOMMINO	RUBBER PAD	PARE CHOCS	PUFFER	GUARNICION
041	**5532105200**	FONDO	BOTTOM	FOND	BODEN	FONDO
042	**6232103400**	GRANO	DOWEL	VIS	STIFTSCHRAUBE	CLAVIJA
043	**611917**	MOLLA	SPRING	RESSORT	FEDER	MUELLE
044	**621986**	ANELLO	RING	ANNEAU	RING	ANILLO
045	**535129**	VALVOLA	VALVE	SOUPAPE	VENTIL	VALVULA
046	**552556**	SPAZZOLINO	BRUSH	BROSSE	BUERSTCHEN	CEPILLO
049	**7032101600**	SUPPORTO	SUPPORT	SUPPORT	HALTER	SOPORTE
050	**533218**	GUARNIZIONE	GASKET	JOINT	DICHTUNG	GUARNICION
051	**6032101200**	DIFFUSORE	DIFFUSER	DIFFUSEUR	DIFFUSOR	DIFUSOR
052	**534482**	MISURINO	MEASURING SPOON	CUILLIERE	MESSBECHER	DE DOSAGE MEDIDOR
053	**534848**	SUPPORTO	SUPPORT	SUPPORT	HALTER	SOPORTE
054	**5332110600**	TUBO	TUBE	TUBE	ROHR	TUBO
055	**685202**	CALDAIA INF.	BOILER LOWER	CHAUDIERE INF.	HEIZKESSEL UNTEN	CALDERA INF.
056	**5132101600**	RESISTENZA	HEATING Element	ELEMENT Chauffant	HEIZELEMENT	RESISTENCIA
057	**533216**	GUARNIZIONE	GASKET	JOINT	DICHTUNG	GUARNICION
058	**690405**	CALDAIA	BOILER	CHAUDIERE	HEIZKESSEL	CALDERA
059	**534801**	PESTELLO	PRESSING DEVICE	PRESSOIR	STOPFER	PISON
060	**5932103400**	INDICE	INDICATOR	INDICATEUR	ZEIGER	INDICE
061	**621968**	DADO	NUT	ECROU	MUTTER	DADO
062	**621970**	ANELLO	RING	ANNEAU	RING	ANILLO
063	**621963**	GUARNIZIONE	GASKET	JOINT	DICHTUNG	GUARNICION
064	**6132101000**	MOLLA	SPRING	RESSORT	FEDER	MUELLE
065	**5232100600**	TERMOSTATO 105°	THERMOSTAT 105°	THERMOSTAT 105°	THERMOSTAT 105°	TERMOSTATO 105°
066	**621962**	RACCORDO	CONNECTION	RACCORD	ANSCHLUSS	JUNTURA
067	**621967**	OGIVA	NOSE	OGIVE	HAUBE	OJIVA
070	**5332110200**	TUBO	TUBE	TUBE	ROHR	TUBO
071	**5332108000**	SCOCCA	BODY	CARROSSERIE	KASTEN	CARCASA
072	**5332108900**	CERNIERA	HINGE	CHARNIERE	SCHARNIER	BISAGRA
073	**5332108700**	GUARNIZIONE	GASKET	JOINT	DICHTUNG	GUARNICION
074	**5332109000**	PISTONE	PISTON	PISTON	KOLBEN	PISTON
075	**6132100800**	MOLLA	SPRING	RESSORT	FEDER	MUELLE
076	**5332111600**	O-RING	O-RING	JOINT OR	O-RING	O-RING
077	**7332111300**	SERBATOIO	TANK	RESERVOIR	TANK	DEPOSITO
078	**5332114800**	SPUGNETTA	SPONGE	EPONGE	SCHWAMM	ESPONJA
080	**606534**	FILTRO	FILTER	FILTRE	FILTER	FILTRO
081	**606535**	FILTRO	FILTER	FILTRE	FILTER	FILTRO
082	**5332112100**	SFERA	BALL	BILLE	KUGEL	ESFERA
084	**534629**	TAPPO	STOPPER	BOUCHON	STOEPSEL	TAPON
085	**5332110400**	FILTRO	FILTER	FILTRE	FILTER	FILTRO
086	**535714**	TAPPO	STOPPER	BOUCHON	STOEPSEL	TAPON
087	**5332108200**	COPERCHIO	COVER	COUVERCLE	DECKEL	TAPA
088	**512640**	SPIA BLU	Blue Warning Light	Temoin Lum. Bleu	Kontrolleuchte Blau	Piloto Azur

DE'LONGHI 'EU' BAR50 NERO Cod.0132109001

Pos	Codice	Italiano	English	Francais	Deutsch	Espanol
089	**512888**	SPIA ARANCIONE	Orange Warning Light	Temoin Lum. Orange	Kontrolleuchte Orange	Piloto Anaranjado
090	**512641**	SPIA VERDE	Green Warning Light	Temoin Lum. Verte	Kontrolleuchte GRUEN	Piloto Verde
091	**5132100300**	SPIA VERDE	Green Warning Light	Temoin Lum. Verte	Kontrolleuchte GRUEN	Piloto Verde
092	**5332106700**	BICCHIERE	GLASS	VERRE	GLAS	COPA
A	**6932101200**	CALDAIA SUP.	BOILER UPPER	CHAUDIERE SUP.	HEIZKESSEL OBEN	CALDERA SUP.
B	**7032103600**	RACCORDO	CONNECTION	RACCORD	ANSCHLUSS	JUNTURA
C	**6132101300**	MOLLA	SPRING	RESSORT	FEDER	MUELLE
D	**536369**	GUARNIZIONE	GASKET	JOINT	DICHTUNG	GUARNICION
E	**5532112100**	TUBO	TUBE	TUBE	ROHR	TUBO
F	**7332128100**	VALVOLA	VALVE	SOUPAPE	VENTIL	VALVULA